LOT 7
IN OR 2232/719
OCEAN BREEZE AT AMELIA PB 8/91

GOODMAN DAVID A & MARGARET A
96034 OCEAN BREEZE WAY
FERNANDINA BEACH, FL 32034

2024

00-00-30-0741-0007-0000

NASSAU COUNTY PROPERTY

BUILDING CHARACTERISTICS

ELEMENT	CD	CONSTRUCTION
Exterior Wall	10	ABOVE AVG 100
Roof Structur	08	IRREGULAR 100
Roof Cover	03	COMP SHNGL 100
Interior Wall	05	DRYWALL 100
Interior Floo	11	CLAY TILE 60
Interior Floo	14	CARPET 40
Air Condition	03	CENTRAL 100
Heating Type	04	AIR DUCTED 100
Bedrooms		4 100
Bathrooms		3.5 100
Frame	02	WOOD FRAME 100
Stories	2.	2. 100
Units		0 100
Occupancy	00	NONE 100
Quality	04	Quality Level 04
DOR CODE	0100	SINGLE FAMILY
MAP NUM		MKT AREA 02
NEIGHBORHOOD/LOC	2122.00	

AREA TYPE	TOTAL GROSS AREA	PCT OF BASE	TOT ADJ AREA	SUBAREA MARKET VALUE
BAS	2,455	100	2,455	401,737
FGR	462	55	254	41,565
FOP	138	30	41	6,709
FOP	187	30	56	9,164
FUS	952	100	952	155,786
STR	48	10	5	818
TOTALS	4,242		3,763	615,779

MARKET ADJUSTMENTS

TYPE	MDL	EFF. AREA	TOT ADJ PTS	EFF. BASE RATE	REPL. COST NEW	AYB	EYB	ECON	FNCT		NORM	% COND
0500	01	3,763	111.3210	166.98	628,346	2018	2018	0	0	0	2.00	98.00

1 SFR CUST – 100% - 2020 Heated Area: 3407 HX Base Yr 2020

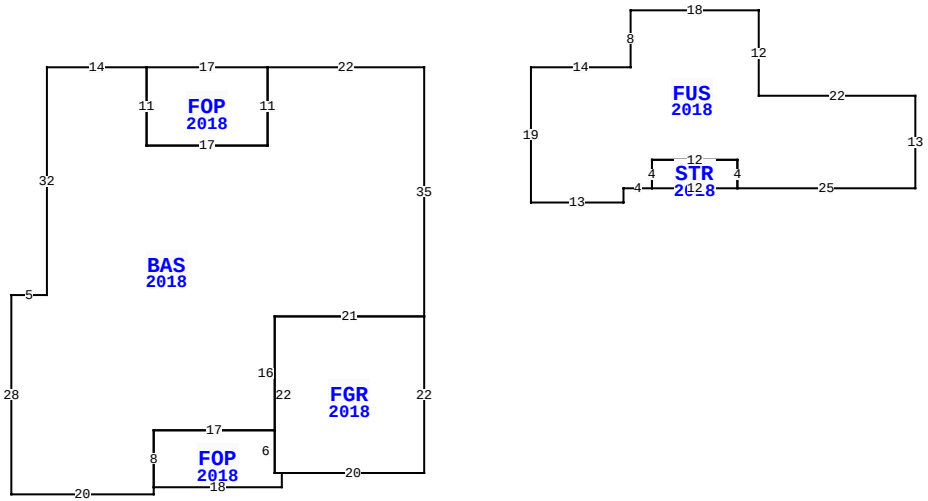

96034 OCEAN BREEZE WAY, FERNANDINA BEACH

BLD DATE		LGL DATE	
XF DATE		LAND DATE	
INC DATE		AG DATE	

VALUATION SUMMARY

VALUATION BY		STANDARD
Tax Group: 8	Tax Dist:	
BUILDING MARKET VALUE		615,779
TOTAL MARKET OB/XF VALUE		40,326
TOTAL LAND VALUE - MARKET		300,000
TOTAL MARKET VALUE		956,105
SOH/AGL Deduction		351,878
ASSESSED VALUE		604,227
TOTAL EXEMPTION VALUE	HX HB	50,000
BASE TAXABLE VALUE		554,227
TOTAL JUST VALUE		956,105
NCON VALUE		0
INCOME VALUE		
PREVIOUS YEAR MKT VALUE		929,261

PERMIT NUM	DESCRIPTION	AMT	ISSUED
2002577	ENCLOSURE	7,044	03/23/2020
2000835	SWIM POOL	35,985	01/29/2020
B1800667	NEW CONSTR	425,009	01/22/2018

SALES DATA

OFF RECORD Number	DATE	TYPE INST	Q / U	V / I	RSN CD	SALE PRICE
2232/0719	10/18/2018	WD	Q	I	02	640,600
GRANTOR: D S WARE HOMES LLC						
GRANTEE: GOODMAN DAVID A & M						
2085/1699	11/29/2016	SW	Q	V	01	120,800
GRANTOR: OCEAN BREEZE OF AMELI						
GRANTEE: D S WARE HOMES LLC						

BUILDING NOTES

BUILDING DIMENSIONS

BAS=[YR=2018] W22 FOP=[YR=2018] W17 S11 E17 N11$ S11 W17 N11 W14 S32 W5 S28 E20 N1 FOP=[YR=2018] E18 N2 FGR=[YR=2018] E20 N22 W21 S22 E1$ W1 N6 W17 S8$ N8 E17 N16 E21 N35$ PTR=E15 FUS=[YR=2018] E14 N8 E18 S12 E22 S13 W25 STR=[YR=2018] W12 N4 E12 S4$ N4 W12 S4 W4 S2 W13 N19$ W15$.

EXTRA FEATURES

LN	OB/XF CODE	DESCRIPTION	BLD	CAP	L	W	UNITS	UT	Adj R	ADJ UNIT PRICE	ORIG COND	YEAR ON	YEAR ACTUAL	Q	% COND	OB/XF MKT VALUE	NOTES
1	0855	CONC PAVER	0	100	0	0	703.00	SF	7.00	7.00	100	2018	2018	3	97	4,773	
2	0855	CONC PAVER	0	100	0	0	70.00	SF	7.00	7.00	100	2018	2018	3	97	475	
3	0600	SUMMER KIT	0	100	0	0	1.00	UT	5,000.00	5,000.00	100	2018	2018	3	82	4,100	
4	0861	POOL GUNIT	0	100	0	0	264.00	SF	85.00	85.00	100	2020	2020	3	93	20,869	
5	0911	SCRN RM A	0	100	0	0	496.00	SF	17.50	17.50	100	2020	2020	3	90	7,812	
6	0855	CONC PAVER	0	100	0	0	232.00	SF	10.00	10.00	100	2020	2020	3	99	2,297	

LAND DESCRIPTION

TOTAL OB/XF 40,326

LN	USE CODE	CLS	LAND USE DESCRIPTION	CAP	RD	LOC ZONE	FRONT	DEPTH	TOT LND UTS	UNIT TYPE	DT	DPTH FACT	% COND	TOT ADJ	UNIT PRICE	ADJ UNIT PRICE	LAND VALUE	OTHER ADJUSTMENTS AND NOTES	YEAR	DENSITY	DECL	FRZ	YR	CONSRV
1	000100	C	SFR	100		PUD	0.00	0.00	1.00	LT		1.00	1.00	1.00	300,000.00	300,000.00	300,000							

REVIEW DATE 08/20/2020 BY DJ Total Acres: 0.00 Total Land Value: 300,000 Market: 0 Agricultural: 0 Common: 300,000 PRINTED 08/06/2024 BY SYS