PT OF LOT 78 PT OR 1794/1866
BEING PARCEL 1
SUB OF SEC 4 PBK 0/59

JASINSKY BRUCE A & PATRICIA L
645 GAINES LANE
FERNANDINA BEACH, FL 32034

2024

00-00-30-0740-0078-0140

NASSAU COUNTY PROPERTY

BUILDING CHARACTERISTICS

ELEMENT	CD	CONSTRUCTION
Exterior Wall	14	WD SHINGLE 100
Roof Structur	08	IRREGULAR 100
Roof Cover	03	COMP SHNGL 100
Interior Wall	05	DRYWALL 100
Interior Floo	12	HARDWOOD 50
Interior Floo	14	CARPET 50
Air Condition	03	CENTRAL 100
Heating Type	04	AIR DUCTED 100
Bedrooms		4 100
Bathrooms		4.5 100
Frame	02	WOOD FRAME 100
Stories	2.	2. 100
Units		0 100
Occupancy	00	NONE 100
Quality	04	Quality Level 04

DOR CODE	0100	SINGLE FAMILY	
MAP NUM		MKT AREA	02
NEIGHBORHOOD/LOC	2021.00		

AREA TYPE	TOTAL GROSS AREA	PCT OF BASE	TOT ADJ AREA	SUBAREA MARKET VALUE
BAS	3,396	100	3,396	435,867
FGR	729	55	401	51,467
FOP	364	30	109	13,989
FOP	512	30	154	19,766
FUS	1,440	100	1,440	184,820
TOTALS	6,441		5,500	705,909

MARKET ADJUSTMENTS

TYPE	MDL	EFF. AREA	TOT ADJ PTS	EFF. BASE RATE	REPL. COST NEW	AYB	EYB	ECON	FNCT		NORM	% COND
0900	01	5,500	112.2188	140.27	771,485	2006	2006	0	0	0	8.50	91.50

1 SNGL FAM – 100% - 2013 Heated Area: 4836 HX Base Yr 2013

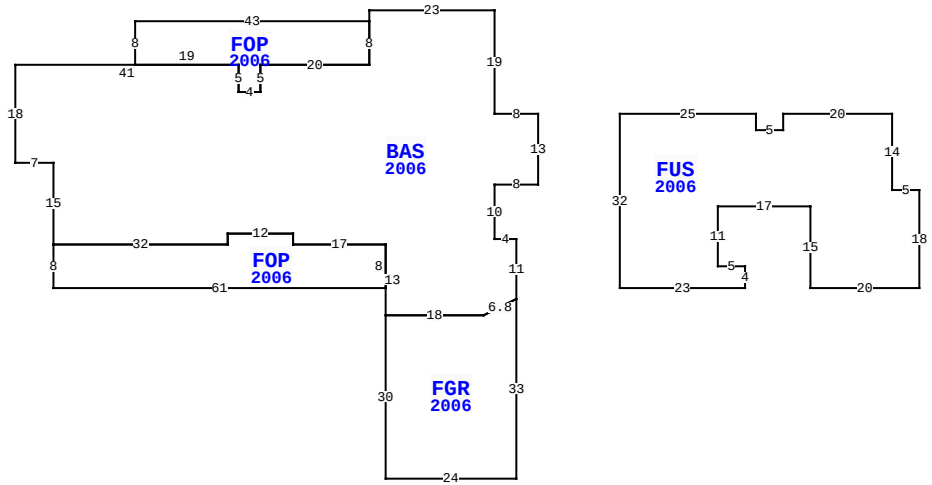

645 GAINES LN, FERNANDINA BEACH

BLD DATE	06/06/2007 KK	LGL DATE	
XF DATE		LAND DATE	03/14/2024 MLU
INC DATE		AG DATE	

NASSAU COUNTY PROPERTY — VALUATION SUMMARY

VALUATION BY		STANDARD
Tax Group: 8	Tax Dist:	
BUILDING MARKET VALUE		705,909
TOTAL MARKET OB/XF VALUE		59,685
TOTAL LAND VALUE - MARKET		300,000
TOTAL MARKET VALUE		1,065,594
SOH/AGL Deduction		518,037
ASSESSED VALUE		547,557
TOTAL EXEMPTION VALUE	HX HB	50,000
BASE TAXABLE VALUE		497,557
TOTAL JUST VALUE		1,065,594
NCON VALUE		0
INCOME VALUE		
PREVIOUS YEAR MKT VALUE		988,295

PERMIT NUM	DESCRIPTION	AMT	ISSUED
M0509879	H/AC	0	06/01/2005
E14178	ELEC OTHER	5,000	02/01/2005
6062007	OTHER	0	02/01/2005
B0516605	SWIM POOL	46,072	01/01/2005
B0414243	NEW CONSTR	500,000	12/01/2004
R047004	REPAIR/RRF	6,500	12/01/2004

SALES DATA

OFF RECORD Number	DATE	TYPE INST	Q / U	V / I	RSN CD	SALE PRICE
1794/1866	5/22/2012	WD	Q	I	05	595,000
GRANTOR: DIAZ KEVIN M & LAURA						
GRANTEE: JASINSKY BRUCE A &						
1209/1339	2/23/2004	WD	Q	V		125,000
GRANTOR: MOONEY WILLIAM A						
GRANTEE: DIAZ KEVIN M & LAUR						

BUILDING NOTES

BUILDING DIMENSIONS

BAS=[YR=2006] W8 N19 W23 S2 FOP=[YR=2006] W43 S8 E19 S5 E4 N5 E20 N8$ S8 W20 S5 W4 N5 W41 S18 E7 S15 FOP=[YR=2006] S8 E61 N8 W17 N2 W12 S2 W32$ E32 N2 E12 S2 E17 S13 FGR=[YR=2006] S30 E24 N33 L6 D3 W18$ E18 U3 R6 N11 W4 N10 E8 N13$ PTR=E15 FUS=[YR=2006] E25 S3 E5 N3 E20 S14 E5 S18 W20 N15 W17 S11 E5 S4 W23 N32$ W15$.

EXTRA FEATURES

LN	OB/XF CODE	DESCRIPTION	BLD	CAP	L	W	UNITS	UT	Adj R	ADJ UNIT PRICE	ORIG COND	YEAR ON	YEAR ACTUAL	Q	% COND	OB/XF MKT VALUE	NOTES
1	0504	FP-ELECTRI	0	100	0	0	1.00	UT	2,000.00	2,000.00	100	2006	2006	3	90	1,800	
2	0812	CONCRETE C	0	100	0	0	3,195.00	SF	4.00	4.00	100	2006	2006	3	87	11,119	
3	0810	CONCRETE A	0	100	29	11	319.00	SF	6.50	6.50	100	2006	2006	3	87	1,804	
4	0812	CONCRETE C	0	100	0	0	1,034.00	SF	4.00	4.00	100	2006	2006	3	87	3,598	
5	0861	POOL GUNIT	0	100	0	0	747.00	SF	85.00	85.00	100	2006	2006	3	44	27,938	
6	0471	VINYL FNC	0	100	0	0	165.00	LF	32.00	32.00	100	2006	2006	3	69	3,643	
7	0911	SCRN RM A	0	100	0	0	1,889.00	SF	17.50	17.50	100	2006	2006	3	27	8,926	
8	0871	POOL HTR R	0	100	0	0	1.00	UT	2,000.00	2,000.00	100	2006	2006	3	27	540	
9	0810	CONCRETE A	0	100	8	4	32.00	SF	6.50	6.50	100	2006	2006	3	87	181	
10	0810	CONCRETE A	0	100	6	4	24.00	SF	6.50	6.50	100	2006	2006	3	87	136	

TOTAL OB/XF 59,685

LAND DESCRIPTION

LN	USE CODE	CLS	LAND USE DESCRIPTION	CAP	RD	LOC ZONE	FRONT	DEPTH	TOT LND UTS	UNIT TYPE	DT	DPTH FACT	% COND	TOT ADJ	UNIT PRICE	ADJ UNIT PRICE	LAND VALUE	OTHER ADJUSTMENTS AND NOTES	YEAR	DENSITY	DECL	FRZ	YR	CONSRV
1	000115	C	SFR ACRES	100		RSF-2	0.00	0.00	1.00	AC		1.00	1.00	1.00	300,000.00	300,000.00	300,000							

REVIEW DATE 05/12/2019 BY KBA Total Acres: 1.00 Total Land Value: 300,000 Market: 0 Agricultural: 0 Common: 300,000 PRINTED 08/06/2024 BY SYS