LOT 5
IN OR 1501/1133 & OR 1501/1134
ESMT IN PT OR 441/518

WAITE STEVEN B & ELIZABETH E
8358 SANCTUARY LN
FERNANDINA BEACH, FL 32034

2024

00-00-30-0603-0005-0000

BUILDING CHARACTERISTICS

ELEMENT	CD	CONSTRUCTION
Exterior Wall	14	WD SHINGLE 100
Roof Structur	08	IRREGULAR 100
Roof Cover	09	CEDAR SHAK 100
Interior Wall	05	DRYWALL 100
Interior Floo	12	HARDWOOD 70
Interior Floo	11	CLAY TILE 30
Air Condition	03	CENTRAL 100
Heating Type	04	AIR DUCTED 100
Bedrooms		5 100
Bathrooms		6 100
Frame	02	WOOD FRAME 100
Stories	2.	2. 100
Units		0 100
Quality	03	Quality Level 03
DOR CODE	0100	SINGLE FAMILY
MAP NUM		MKT AREA 10
NEIGHBORHOOD/LOC	10005.00	

AREA TYPE	TOTAL GROSS AREA	PCT OF BASE	TOT ADJ AREA	SUBAREA MARKET VALUE
BAS	3,411	100	3,411	1,929,864
FGR	352	55	194	109,761
FGR	819	55	450	254,600
FOP	32	30	10	5,658
FOP	216	30	65	36,776
FOP	216	30	65	36,776
FOP	800	30	240	135,787
FOP	1,040	30	312	176,523
FST	49	55	27	15,276
FST	194	55	107	60,538
TOTALS	11,788		8,525	4,823,245

MARKET ADJUSTMENTS

TYPE	MDL	EFF. AREA	TOT ADJ PTS	EFF. BASE RATE	REPL. COST NEW	AYB	EYB	ECON	FNCT	MA	NORM	% COND
0500	22	8,525	401.2578	601.89	5,131,112	2019	2019	0	0	4	2.00	94.00

1 SFR CUST - 100% - 2021 Heated Area: 6345 HX Base Yr 2021

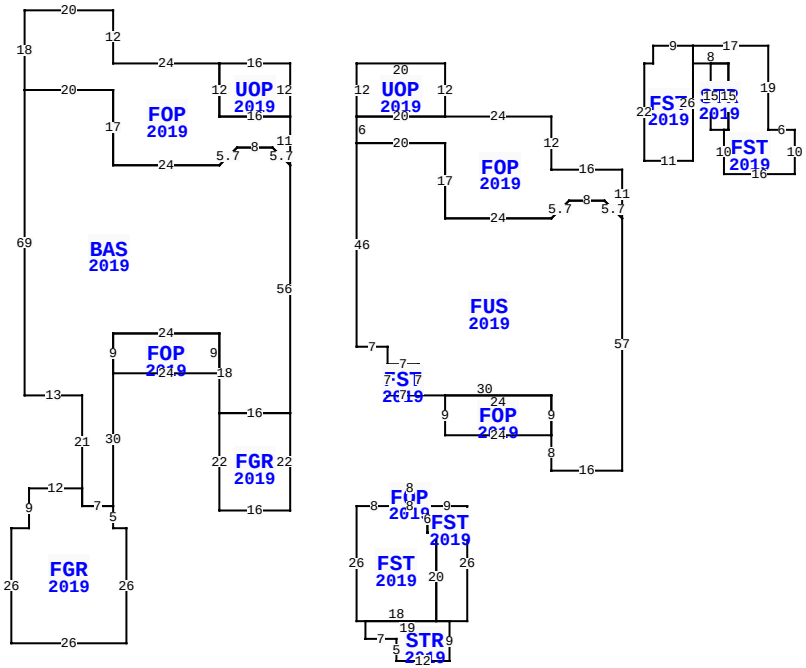

** This building has 18 Sub-Areas

8358 SANCTUARY LN, FERNANDINA BEACH

BLD DATE		LGL DATE	
XF DATE		LAND DATE	04/10/2024 MLU
INC DATE		AG DATE	

NASSAU COUNTY PROPERTY

PAGE 1 of 1 5

VALUATION SUMMARY

VALUATION BY		STANDARD
Tax Group: 5	Tax Dist:	
BUILDING MARKET VALUE		4,823,245
TOTAL MARKET OB/XF VALUE		136,383
TOTAL LAND VALUE - MARKET		3,350,000
TOTAL MARKET VALUE		8,309,628
SOH/AGL Deduction		1,969,429
ASSESSED VALUE		6,340,199
TOTAL EXEMPTION VALUE	HX HB	50,000
BASE TAXABLE VALUE		6,290,199
TOTAL JUST VALUE		8,309,628
NCON VALUE		0
INCOME VALUE		
PREVIOUS YEAR MKT VALUE		7,945,838

PERMIT NUM	DESCRIPTION	AMT	ISSUED
19122290	CO ISSUED	0	11/26/2019
B1810290	SWIM POOL	55,334	10/11/2018
B1802680	NEW CONSTR	918,197	03/14/2018
B1801754	DEMOLITION	15,000	02/20/2018
B1711182	DEMOLITION	36,960	12/15/2017
7136	NEW CONSTR	251,000	04/02/1991

SALES DATA

OFF RECORD Number	DATE	TYPE INST	Q / U	V / I	RSN CD	SALE PRICE
1501/1134	5/29/2007	WD	U	I	06	1,650,000
GRANTOR: SCHUCHERT KARALYN						
GRANTEE: WAITE STEVEN B & EL						
1501/1133	5/29/2007	WD	U	I	06	1,650,000
GRANTOR: SCHUCHERT JOSEPH						
GRANTEE: WAITE STEVEN B & EL						

BUILDING NOTES

EXTRA FEATURES

LN	OB/XF CODE	DESCRIPTION	BLD	CAP	L	W	UNITS	UT	Adj R	ADJ UNIT PRICE	ORIG COND	YEAR ON	YEAR ACTUAL	Q	% COND	OB/XF MKT VALUE	NOTES
1	0500	FP-PRE FAB	0	100	0	0	2.00	UT	7,000.00	7,000.00	100	2019	2019	3	99	13,860	
2	0861	POOL GUNIT	0	100	0	0	520.00	SF	85.00	85.00	100	2019	2019	3	90	39,780	
3	0416	DUNEWALKS	0	100	0	0	1,018.00	SF	22.50	22.50	100	2019	2019	3	86	19,698	
4	0855	CONC PAVER	0	100	0	0	2,456.00	SF	10.00	10.00	100	2019	2019	3	98	24,069	
5	0855	CONC PAVER	0	100	0	0	195.00	SF	25.00	25.00	100	2019	2019	3	98	4,778	
6	0830	FLAGSTONE	0	100	0	0	308.00	SF	30.00	30.00	100	2018	2018	3	97	8,963	
7	1126	CB/STC 8"	0	100	0	0	514.00	SF	8.00	8.00	100	2019	2019	3	98	4,030	
8	0600	SUMMER KIT	0	100	0	0	1.00	UT	10,000.00	10,000.00	100	2020	2020	3	90	9,000	
9	1075	TRELLIS G	0	100	5	7	35.00	SF	70.00	70.00	100	2019	2019	3	90	2,205	
10	0410	ELEVATOR	0	100	0	0	1.00	UT	10,000.00	10,000.00	100	2019	2019	3	100	10,000	

BUILDING DIMENSIONS

UOP=[YR=2019] W16 FOP=[YR=2019] W24N12W20 S18 BAS=[YR=2019] S69 E13 S21 FGR=[YR=2019] W12 S9W4 S26 E26 N26 W3 N5 W7N4$ S4E7 N30 FOP=[YR=2019] E24 N9 W24S9$ N9E24S18 FGR=[YR=2019] S22E16N22W16$ E16N56 U4 L4 W8 D4 L4 W24N17W20$ E20 S17E24 U4 R4 E8 D4 R4 N11 W16 N12$ S12 E16 N12$ PTR=E15 UOP=[YR=2019] E20S12 FOP=[YR=2019] E24S12 E16S11 FUS=[YR=2019] S57 W16 N8 FOP=[YR=2019] W24N9E24S9$ N9W30 FST=[YR=2019] W7N7E7S7$ N7W7N4 W7 N46 E20 S17E24 U4 R4 E8 D4 R4 $ U4 L4 W8 D4 L4 W24N17W20N6 E20$ W20N12$ W15$ PTR=E80 FST=[YR=2019] E2N4 E9 FST=[YR=2019] E17S19 E6S10W16N10 STR=[YR=2019] W3N15E4S15 W1$ E1N15W8N4$ S26W11N22$ W80$ PTR=E15 S100 FST=[YR=2019] E8 FOP=[YR=2019]

LAND DESCRIPTION

TOTAL OB/XF 136,383

LN	USE CODE	CLS	LAND USE DESCRIPTION	CAP	RD	LOC ZONE	FRONT	DEPTH	TOT LND UTS	UNIT TYPE	DT	DPTH FACT	% COND	TOT ADJ	UNIT PRICE	ADJ UNIT PRICE	LAND VALUE	OTHER ADJUSTMENTS AND NOTES	YEAR	DENSITY	DECL	FRZ	YR	CONSRV
1	000120	C	SFR OCN FT	100		RSF-1	0.00	0.00	1.00	LT		1.00	1.00	1.00	3,350,000.00	3,350,000.00	3,350,000							

REVIEW DATE 01/02/2020 BY DJ Total Acres: 0.00 Total Land Value: 3,350,000 Market: 0 Agricultural: 0 Common: 3,350,000 PRINTED 08/06/2024 BY SYS