LOT 3
IN OR 2009/1812
ESMT AGREEMENT PT OR 766/1726

JONES JAMES C III & LAURIE W
C/O THE JONES COMPANY, P O BOX 2266
WAYCROSS, GA 31502-2266

2024

00-00-30-0603-0003-0000

NASSAU COUNTY PROPERTY

BUILDING CHARACTERISTICS

ELEMENT	CD	CONSTRUCTION
Exterior Wall	16	WD FR STUC 60
Exterior Wall	17	CB STUCCO 40
Roof Structur	08	IRREGULAR 100
Roof Cover	07	CONC TILE 100
Interior Wall	05	DRYWALL 100
Interior Floo	12	HARDWOOD 70
Interior Floo	11	CLAY TILE 30
Air Condition	03	CENTRAL 100
Heating Type	04	AIR DUCTED 100
Foundation	06	PIERS CONC 100
Bedrooms		5 100
Bathrooms		6.5 100
Frame	02	WOOD FRAME 100
Stories	3.	3. 100
Units		0 100
Quality	03	Quality Level 03
DOR CODE	0100	SINGLE FAMILY
MAP NUM		MKT AREA 10
NEIGHBORHOOD/LOC	10005.00	

AREA TYPE	TOTAL GROSS AREA	PCT OF BASE	TOT ADJ AREA	SUBAREA MARKET VALUE
BAL	32	15	5	3,045
BAL	60	15	9	5,480
BAL	96	15	14	8,525
BAL	256	15	38	23,139
BAS	3,111	100	3,111	1,894,299
FGR	852	55	469	285,576
FOP	8	30	2	1,218
FOP	72	30	22	13,396
FOP	96	30	29	17,659
FOP	200	30	60	36,534
TOTALS	12,850		9,661	5,882,616

MARKET ADJUSTMENTS

TYPE	MDL	EFF. AREA	TOT ADJ PTS	EFF. BASE RATE	REPL. COST NEW	AYB	EYB	ECON	FNCT		NORM	% COND
0500	22	9,661	414.2220	621.33	6,002,669	2019	2019	0	0	0	2.00	98.00

1 SFR CUST - 0% - 0 Heated Area: 8114 HX Base Yr

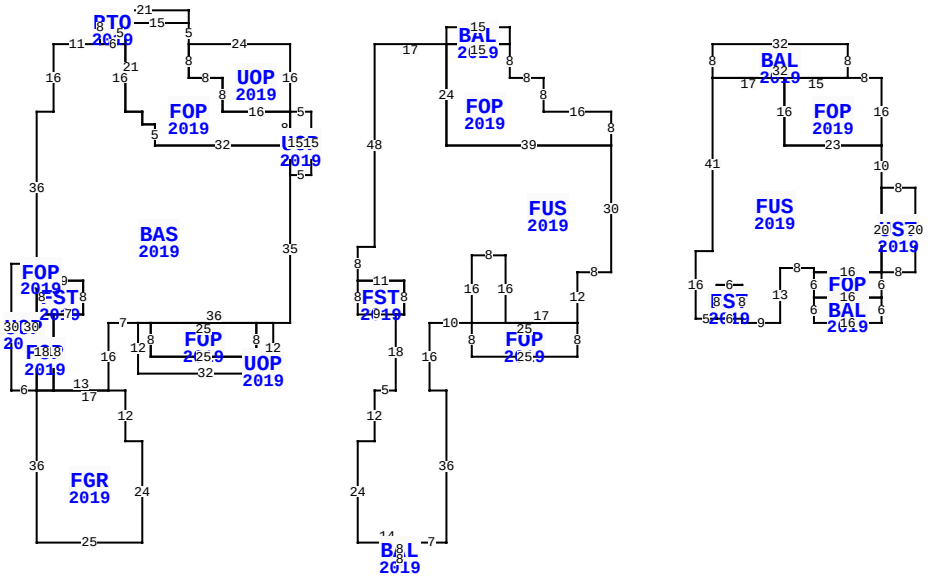

** This building has 25 Sub-Areas

8402 SANCTUARY LN, FERNANDINA BEACH

BLD DATE		LGL DATE	
XF DATE		LAND DATE	04/10/2024 MLU
INC DATE		AG DATE	

VALUATION SUMMARY

VALUATION BY	STANDARD
Tax Group: 5	Tax Dist:
BUILDING MARKET VALUE	5,882,616
TOTAL MARKET OB/XF VALUE	46,231
TOTAL LAND VALUE - MARKET	3,350,000
TOTAL MARKET VALUE	9,278,847
SOH/AGL Deduction	1,968,444
ASSESSED VALUE	7,310,403
TOTAL EXEMPTION VALUE	0
BASE TAXABLE VALUE	7,310,403
TOTAL JUST VALUE	9,278,847
NCON VALUE	0
INCOME VALUE	
PREVIOUS YEAR MKT VALUE	8,864,019

PERMIT NUM	DESCRIPTION	AMT	ISSUED
B1633497	NEW CONSTR	1,008,985	12/01/2016
B21186	XFOB	20,000	03/01/2008

SALES DATA

OFF RECORD Number	DATE	TYPE INST	Q U /	V I /	RSN CD	SALE PRICE
2009/1812	10/20/2015	WD	Q	V	02	2,950,000
GRANTOR: DOUGLAS CURT L						
GRANTEE: JONES JAMES C III &						
1212/1403	3/03/2004	WD	U	V	01	100
GRANTOR: DOUGLAS CURT L & SUSA						
GRANTEE: DOUGLAS CURT L						

BUILDING NOTES

EXTRA FEATURES

LN	OB/XF CODE	DESCRIPTION	BLD	CAP	L	W	UNITS	UT	Adj R	ADJ UNIT PRICE	ORIG COND	YEAR ON	YEAR ACTUAL	Q	% COND	OB/XF MKT VALUE	NOTES
1	0855	CONC PAVER	0	0	0	0	2,157.00	SF	10.00	10.00	100	2019	2019	3	98	21,139	
2	1126	CB/STC 8"	0	0	0	0	1,324.00	SF	8.00	8.00	100	2019	2019	3	98	10,380	
3	0416	DUNEWALKS	0	0	0	0	680.00	SF	15.00	15.00	100	2019	2019	3	86	8,772	
4	0504	FP-ELECTRI	0	0	0	0	3.00	UT	2,000.00	2,000.00	100	2019	2019	3	99	5,940	

BUILDING DIMENSIONS

UOP=[YR=2019] W24 FOP=[YR=2019] N5 PTO=[YR=2019] N3 W21S8
BAS=[YR=2019] W11 S16W4S36 UOP=[YR=2019] W6S30E6
FGR=[YR=2019] S36E25N24W4N12W17 FOP=[YR=2019]
N18FST=[YR=2019] E7N8W9 FOP=[YR=2019] N4W2S4E2$W2S8E4$ W4S18
E4$W4$N30$ E2S4E9S8W7S18E13N16 E7UOP=[YR=2019]
S12E32N12W4FOP=[YR=2019] W25S8E25N8$S8W25N8W3$ E36N35
UOP=[YR=2019] E5N15W5S15$N7 W32N5W3 N3W4N16W6$ E6N5E15$
W15S21E4S3 E3S5E32N8W16N8W8N8$ S8E8S8E16 N16$PTR=E20
FUS=[YR=2019] E17 BAL=[YR=2019] N4E15S4 FOP=[YR=2019] S8E8S8
E16S8W39N24E15$W15$S24E39S30W8 S12 FOP=[YR=2019] S8W25N8E25$
W17N16 W8S16W10S16E4S36W7 BAL=[YR=2019] S4
W8N4E8$W14N24E4N12E5N18 FST=[YR=2019] E2N8W11S8E9$ E2N8W11N8

LAND DESCRIPTION

TOTAL OB/XF 46,231

LN	USE CODE	CLS	LAND USE DESCRIPTION	CAP	RD	LOC ZONE	FRONT	DEPTH	TOT LND UTS	UNIT TYPE	DT	DPTH FACT	% COND	TOT ADJ	UNIT PRICE	ADJ UNIT PRICE	LAND VALUE	OTHER ADJUSTMENTS AND NOTES	YEAR	DENSITY	DECL	FRZ	YR	CONSRV
1	000120	C	SFR OCN FT	0		RSF-1	0.00	0.00	1.00	LT		1.00	1.00	1.00	3,350,000.00	3,350,000.00	3,350,000							

REVIEW DATE 06/10/2019 BY DJ Total Acres: 0.00 Total Land Value: 3,350,000 Market: 0 Agricultural: 0 Common: 3,350,000 PRINTED 08/06/2024 BY SYS