LOTS 11 & 12
IN OR 711/1192
RIVER OAKS OF AMELIA PB 5/407

WOODS DAVID F
184 RIVER OAKS DRIVE
FERNANDINA BEACH, FL 32034

2024

00-00-30-0560-0011-0000

NASSAU COUNTY PROPERTY

BUILDING CHARACTERISTICS

ELEMENT	CD	CONSTRUCTION
Exterior Wall	20	FACE BRICK 100
Roof Structur	03	GABLE/HIP 100
Roof Cover	03	COMP SHNGL 100
Interior Wall	05	DRYWALL 90
Interior Wall	08	DECORATIVE 10
Interior Floo	14	CARPET 80
Interior Floo	11	CLAY TILE 20
Air Condition	03	CENTRAL 100
Heating Type	04	AIR DUCTED 100
Bedrooms		4 100
Bathrooms		4 100
Frame	02	WOOD FRAME 100
Stories	2.	2. 100
Units		0 100
Occupancy	00	NONE 100
Quality	03	Quality Level 03
DOR CODE	0100	SINGLE FAMILY
MAP NUM		MKT AREA 02
NEIGHBORHOOD/LOC	2024.00	

AREA TYPE	TOTAL GROSS AREA	PCT OF BASE	TOT ADJ AREA	SUBAREA MARKET VALUE
BAS	1,901	100	1,901	227,281
FGR	240	55	132	15,782
FGR	489	55	269	32,161
FOP	44	30	13	1,554
FUS	1,649	100	1,649	197,152
PTO	60	5	3	359
PTO	289	5	14	1,674
UOP	33	20	7	837
TOTALS	4,705		3,988	476,800

MARKET ADJUSTMENTS

TYPE	MDL	EFF. AREA	TOT ADJ PTS	EFF. BASE RATE	REPL. COST NEW	AYB	EYB	ECON	FNCT		NORM	% COND
0500	01	3,988	100.8900	151.34	603,544	1995	1995	0	0	0	21.00	79.00

1 SFR CUST – 100% - 1996 Heated Area: 3550 HX Base Yr 1996

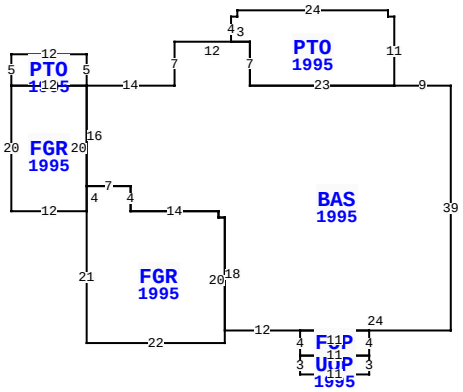

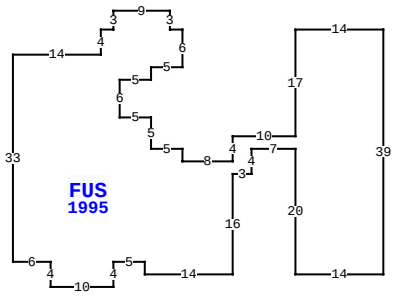

184 RIVER OAKS DR, FERNANDINA BEACH

BLD DATE		LGL DATE	
XF DATE		LAND DATE	04/18/2024 MLU
INC DATE		AG DATE	

VALUATION SUMMARY

VALUATION BY		STANDARD
Tax Group: 8	Tax Dist:	
BUILDING MARKET VALUE		476,800
TOTAL MARKET OB/XF VALUE		8,114
TOTAL LAND VALUE - MARKET		360,000
TOTAL MARKET VALUE		844,914
SOH/AGL Deduction		381,393
ASSESSED VALUE		463,521
TOTAL EXEMPTION VALUE	HX HB WR	55,000
BASE TAXABLE VALUE		408,521
TOTAL JUST VALUE		844,914
NCON VALUE		0
INCOME VALUE		
PREVIOUS YEAR MKT VALUE		785,594

PERMIT NUM	DESCRIPTION	AMT	ISSUED
B9401261	NEW CONSTR	149,612	08/01/1994

SALES DATA

OFF RECORD Number	DATE	TYPE INST	Q U	V I	RSN CD	SALE PRICE
0711/1192	8/17/1994	WD	U	V	09	74,000
GRANTOR: AMELIA ISLAND BLDG &						
GRANTEE: WOODS DAVID & ROBYN						
0711/1191	8/17/1994	QC	U	V	10	100
GRANTOR: COONROD ANNE T						
GRANTEE: AMELIA ISLAND BLDG						

BUILDING NOTES

BUILDING DIMENSIONS

BAS=[YR=1995] W9 PTO=[YR=1995] N11 W1 N1 W24 S1 W1 S4 E3 S7 E23$ W23 N7 W12 S7 W14 PTO=[YR=1995] N5 W12S5 FGR=[YR=1995] S20 E12 FGR=[YR=1995] S21 E22 N20 W1 N1 W14 N4 W7 S4$ N20 W12$ E12$ S16 E7 S4E14 S1 E1 S18 E12 FOP=[YR=1995] S4 UOP=[YR=1995] S3 E11 N3 W11$ E11 N4 W11$ E24 N39$ PTR=E15 FUS=[YR=1995] E14 N4 E2 N3 E9 S3 E2 S6 W5 S2 W5 S6 E5 S5 E5 S2 E8 N4 E10 N17 E14 S39 W14 N20 W7 S4 W3 S16 W14 N2 W5 S4 W10 N4 W6 N33$ W15$.

EXTRA FEATURES

LN	OB/XF CODE	DESCRIPTION	BLD	CAP	L	W	UNITS	UT	Adj R	ADJ UNIT PRICE	ORIG COND	YEAR ON	YEAR ACTUAL	Q	% COND	OB/XF MKT VALUE	NOTES
1	0504	FP-ELECTRI	0	100	0	0	1.00	UT	2,000.00	2,000.00	100	1995	1995	3	77	1,540	
2	0812	CONCRETE C	0	100	0	0	1,968.00	SF	4.00	4.00	100	1995	1995	3	70	5,510	
3	0810	CONCRETE A	0	100	7	4	28.00	SF	6.50	6.50	100	1995	1995	3	70	127	
4	0810	CONCRETE A	0	100	0	0	206.00	SF	6.50	6.50	100	1995	1995	3	70	937	

LAND DESCRIPTION

TOTAL OB/XF 8,114

LN	USE CODE	CLS	LAND USE DESCRIPTION	CAP	RD	LOC ZONE	FRONT	DEPTH	TOT LND UTS	UNIT TYPE	DT	DPTH FACT	% COND	TOT ADJ	UNIT PRICE	ADJ UNIT PRICE	LAND VALUE	OTHER ADJUSTMENTS AND NOTES	YEAR	DENSITY	DECL	FRZ	YR	CONSRV
1	000100	C	SFR	100		RG-1	0.00	0.00	1.00	LT		1.00	1.00	0.80	225,000.00	180,000.00	180,000							
2	000100	C	SFR	100		RG-1	0.00	0.00	1.00	LT		1.00	1.00	0.80	225,000.00	180,000.00	180,000							

REVIEW DATE 05/15/2019 BY DJA Total Acres: 0.00 Total Land Value: 360,000 Market: 0 Agricultural: 0 Common: 360,000 PRINTED 08/06/2024 BY SYS