LOT 10
RIVER OAKS OF AMELIA PB 5/407

DAVIES JULIE M LIVING TRUST/DAVIES JULIE M TRUSTEE
3051 RIVERSIDE DR
FERNANDINA BEACH, FL 32034

2024

00-00-30-0560-0010-0000

NASSAU COUNTY PROPERTY

BUILDING CHARACTERISTICS

ELEMENT	CD	CONSTRUCTION
Exterior Wall	16	WD FR STUC 100
Roof Structur	08	IRREGULAR 100
Roof Cover	08	CLAY TILE 100
Interior Wall	05	DRYWALL 100
Interior Floo	12	HARDWOOD 70
Interior Floo	11	CLAY TILE 30
Air Condition	03	CENTRAL 100
Heating Type	04	AIR DUCTED 100
Bedrooms		5 100
Bathrooms		5 100
Frame	02	WOOD FRAME 100
Stories	2.	2. 100
Units		0 100
Quality	03	Quality Level 03
DOR CODE	0100	SINGLE FAMILY
MAP NUM		MKT AREA 02
NEIGHBORHOOD/LOC	2024.00	

AREA TYPE	TOTAL GROSS AREA	PCT OF BASE	TOT ADJ AREA	SUBAREA MARKET VALUE
BAL	44	15	7	1,589
BAL	162	15	24	5,447
BAL	240	15	36	8,170
BAS	2,779	100	2,779	630,666
FAT	916	20	183	41,530
FGR	1,029	55	566	128,448
FOP	80	30	24	5,447
FOP	99	30	30	6,808
FOP	144	30	43	9,758
FOP	240	30	72	16,340
TOTALS	7,756		5,109	1,159,436

MARKET ADJUSTMENTS

TYPE	MDL	EFF. AREA	TOT ADJ PTS	EFF. BASE RATE	REPL. COST NEW	AYB	EYB	ECON	FNCT		NORM	% COND
0500	11	5,109	151.2951	226.94	1,159,436	2023	2023	0	0	0	0.00	100.00

1 SFR CUST - 100% - 2024 Heated Area: 4195 HX Base Yr 2024

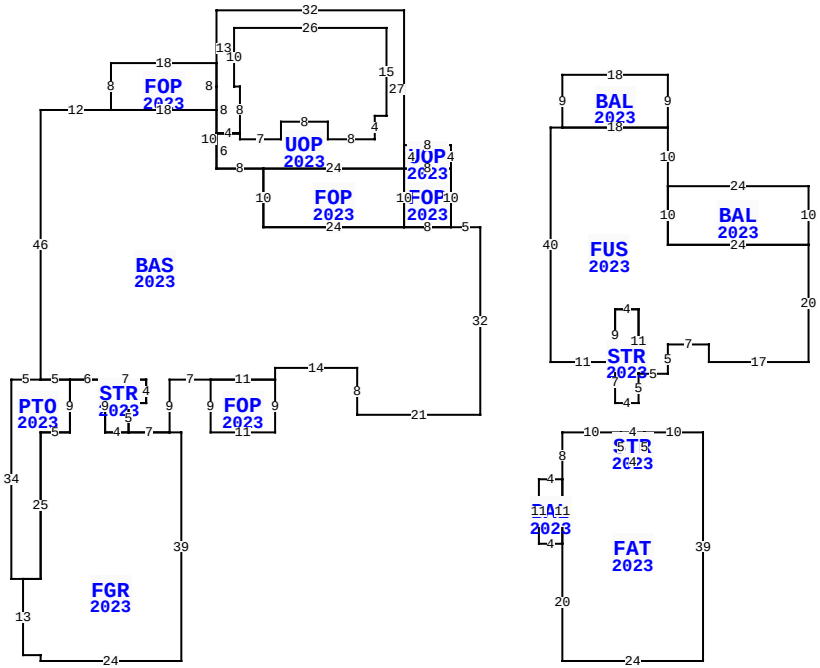

** This building has 17 Sub-Areas

3051 RIVERSIDE DR, FERNANDINA BEACH

BLD DATE		LGL DATE	
XF DATE		LAND DATE	04/18/2024 MLU
INC DATE		AG DATE	

VALUATION SUMMARY

VALUATION BY		STANDARD
Tax Group: 8	Tax Dist:	
BUILDING MARKET VALUE		1,159,436
TOTAL MARKET OB/XF VALUE		110,615
TOTAL LAND VALUE - MARKET		375,000
TOTAL MARKET VALUE		1,645,051
SOH/AGL Deduction		66,242
ASSESSED VALUE		1,578,809
TOTAL EXEMPTION VALUE	HX HB	50,000
BASE TAXABLE VALUE		1,528,809
TOTAL JUST VALUE		1,645,051
NCON VALUE		1,270,051
INCOME VALUE		
PREVIOUS YEAR MKT VALUE		275,000

PERMIT NUM	DESCRIPTION	AMT	ISSUED
20234546	CO		04/06/2023
220011395	POOL SCREEN RM 10	18,000	01/06/2023
20009997	SWIM POOL	50,000	10/20/2020
20003293	NEW CONSTR	576,467	04/16/2020

SALES DATA

OFF RECORD Number	DATE	TYPE INST	Q / U	V / I	RSN CD	SALE PRICE
2266/1839	4/08/2019	WD	Q	V	02	278,000
GRANTOR: SEA DUNES INVESTMENTS						
GRANTEE: DAVIES JULIE M LIVI						
1319/0832	5/23/2005	WD	Q	V		280,000
GRANTOR: COONROD ANNE						
GRANTEE: SEA DUNES INVESTMEN						

BUILDING NOTES

EXTRA FEATURES

LN	OB/XF CODE	DESCRIPTION	BLD	CAP	L	W	UNITS	UT	Adj R	ADJ UNIT PRICE	ORIG COND	YEAR ON	YEAR ACTUAL	Q	% COND	OB/XF MKT VALUE	NOTES
1	0855	CONC PAVER	0	100	0	0	3,440.00	SF	10.00	10.00	100	2024	2023		100	34,400	
2	0861	POOL GUNIT	0	100	0	0	479.00	SF	85.00	85.00	100	2024	2023		100	40,715	
3	0871	POOL HTR R	0	100	0	0	1.00	UT	4,000.00	4,000.00	100	2024	2023		100	4,000	
4	0462	ST/AL FNC	0	100	108	4	432.00	SF	10.00	10.00	100	2024	2023		100	4,320	
5	0463	FENCE GATE	0	100	0	0	3.00	UT	300.00	300.00	100	2024	2023		100	900	
6	0600	SUMMER KIT	0	100	0	0	1.00	UT	5,000.00	5,000.00	100	2024	2023		100	5,000	
7	0912	SCRN RM G	0	100	32	31	992.00	SF	20.00	20.00	100	2024	2023		100	19,840	
8	1126	CB/STC 8"	0	100	36	5	180.00	SF	8.00	8.00	100	2024	2023		100	1,440	

BUILDING DIMENSIONS

BAS=[YR=2023;ORIG=100,30] W5 W8 W24 N10 W8 N10 W18 W12 S46 E5 E6 E7 S4 W3 S5 E7 N9 E7 E11 N2 E14 S8 E21 N32 $
STR=[YR=2023;ORIG=43,56] W7 S9 E4 N5 E3 N4 $
FOP=[YR=2023;ORIG=54,56] E11 S9 W11 N9 $
FOP=[YR=2023;ORIG=63,20] E24 S10 W24 N10 $
FOP=[YR=2023;ORIG=87,20] E8 S10 W8 N10 $
UOP=[YR=2023;ORIG=87,16] E8 S4 W8 N4 $
FOP=[YR=2023;ORIG=37,2] E18 S8 W18 N8 $
UOP=[YR=2023;ORIG=55,6] N13 E32 S27 W24 W8 N6 E4 S1 E7 N3 E8 S3 E8 N4 E2 N15 W26 S10 E1 S8 W4 N8 $
PTO=[YR=2023;ORIG=30,56] W5 W5 S34 E2 E3 N25 E5 N9 $
FGR=[YR=2023;ORIG=30,56] S9 W5 S25 W3 S13 E3 S1 E24 N39 W2 W7

LAND DESCRIPTION

TOTAL OB/XF 110,615

LN	USE CODE	CLS	LAND USE DESCRIPTION	CAP	RD	LOC ZONE	FRONT	DEPTH	TOT LND UTS	UNIT TYPE	DT	DPTH FACT	% COND	TOT ADJ	UNIT PRICE	ADJ UNIT PRICE	LAND VALUE	OTHER ADJUSTMENTS AND NOTES	YEAR	DENSITY	DECL	FRZ	YR	CONSRV
1	000116	C	SFR MARSH	100		RG-1	0.00	0.00	1.00	LT		1.00	1.00	1.00	375,000.00	375,000.00	375,000							

REVIEW DATE 08/09/2023 BY TW Total Acres: 0.00 Total Land Value: 375,000 Market: 0 Agricultural: 0 Common: 375,000 PRINTED 08/06/2024 BY SYS