LOT 9
RESERVE AT OLD BLUFF PB 7/34

DEGROFF DAVE C & JENNIFER R L/E/
95028 RESERVE CT
FERNANDINA BEACH, FL 32034

2024

00-00-30-054B-0009-0000

BUILDING CHARACTERISTICS

ELEMENT	CD	CONSTRUCTION
Exterior Wall	16	WD FR STUC 100
Roof Structur	08	IRREGULAR 100
Roof Cover	03	COMP SHNGL 100
Interior Wall	05	DRYWALL 100
Interior Floo	11	CLAY TILE 70
Interior Floo	14	CARPET 30
Air Condition	03	CENTRAL 100
Heating Type	04	AIR DUCTED 100
Bedrooms		3 100
Bathrooms		3 100
Frame	02	WOOD FRAME 100
Stories	1.	1. 100
Units		0 100
Occupancy	00	NONE 100
Quality	04	Quality Level 04
DOR CODE	0100	SINGLE FAMILY
MAP NUM		MKT AREA 03
NEIGHBORHOOD/LOC	3027.00	

AREA TYPE	TOTAL GROSS AREA	PCT OF BASE	TOT ADJ AREA	SUBAREA MARKET VALUE
BAS	2,475	100	2,475	402,673
FGR	460	55	253	41,162
FOP	36	30	11	1,790
FSP	348	40	139	22,615
PTO	90	5	4	651
UOP	12	20	2	326
UOP	12	20	2	326
UOP	489	20	98	15,944
TOTALS	3,922		2,984	485,485

MARKET ADJUSTMENTS

TYPE	MDL	EFF. AREA	TOT ADJ PTS	EFF. BASE RATE	REPL. COST NEW	AYB	EYB	ECON	FNCT		NORM	% COND
0500	01	2,984	118.5387	177.81	530,585	2006	2006	0	0	0	8.50	91.50

1 SFR CUST – 100% - 2023 Heated Area: 2475 HX Base Yr 2023

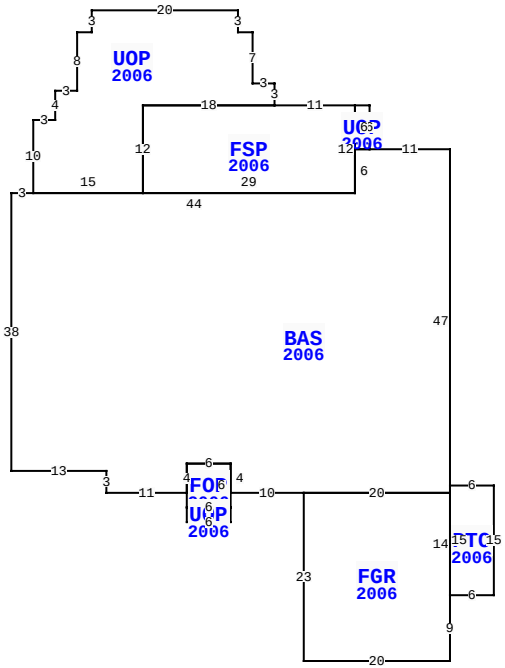

95028 RESERVE CT, FERNANDINA BEACH

BLD DATE	02/07/2007 0	LGL DATE	
XF DATE		LAND DATE	04/11/2024 MLU
INC DATE		AG DATE	

NASSAU COUNTY PROPERTY

PAGE 1 of 1 8

VALUATION SUMMARY

VALUATION BY		STANDARD
Tax Group: 8	Tax Dist:	
BUILDING MARKET VALUE		485,485
TOTAL MARKET OB/XF VALUE		17,108
TOTAL LAND VALUE - MARKET		325,000
TOTAL MARKET VALUE		827,593
SOH/AGL Deduction		22,763
ASSESSED VALUE		804,830
TOTAL EXEMPTION VALUE	HX HB	50,000
BASE TAXABLE VALUE		754,830
TOTAL JUST VALUE		827,593
NCON VALUE		0
INCOME VALUE		
PREVIOUS YEAR MKT VALUE		781,388

PERMIT NUM	DESCRIPTION	AMT	ISSUED
M10697	MECH OTHER	0	11/01/2005
E16057	ELEC OTHER	2,000	10/01/2005
C16050	CO ISSUED	448,155	09/01/2005
P10094	OTHER	0	09/01/2005
R08218	REPAIR/RRF	8,500	09/01/2005
B16050	NEW CONSTR	448,155	09/01/2005

SALES DATA

OFF RECORD Number	DATE	TYPE INST	Q / U	V / I	RSN CD	SALE PRICE
2681/1553	11/27/2023	LE	U	I	11	100
GRANTOR: DEGROFF DAVE C & JENN						
GRANTEE: DEGROFF NATE C						
2512/0216	11/04/2021	WD	Q	I	01	850,000
GRANTOR: KING SAM C JR & SUZAN						
GRANTEE: DEGROFF DAVE C & JE						

EXTRA FEATURES

LN	OB/XF CODE	DESCRIPTION	BLD	CAP	L	W	UNITS	UT	Adj R	ADJ UNIT PRICE	ORIG COND	YEAR ON	YEAR ACTUAL	Q	% COND	OB/XF MKT VALUE	NOTES
1	0500	FP-PRE FAB	0	100	0	0	1.00	UT	3,500.00	3,500.00	100	2006	2006	3	90	3,150	
2	0812	CONCRETE C	0	100	0	0	1,914.00	SF	4.00	4.00	100	2006	2006	3	87	6,661	
3	1126	CB/STC 8"	0	100	0	0	36.00	SF	8.00	8.00	100	2006	2006	3	87	251	
4	0462	ST/AL FNC	0	100	0	0	1,044.00	SF	10.00	10.00	100	2008	2008	3	52	5,429	
5	0855	CONC PAVER	0	100	0	0	191.00	SF	7.00	7.00	100	2008	2008	3	89	1,190	
6	0830	FLAGSTONE	0	100	10	8	80.00	SF	6.00	6.00	100	2008	2008	3	89	427	

BUILDING NOTES

BUILDING DIMENSIONS

BAS=[YR=2006] W3 S38 E13 S3 E11 FOP=[YR=2006] S2
UOP=[YR=2006] S2 E6 N2 W6 $ E6 N6 W6 S4$ N4 E6 S4 E10
FGR=[YR=2006] S23 E20 N9 PTO=[YR=2006] E6 N15 W6 S15$ N14
W20$ E20 N47 W11 UOP=[YR=2006] N6 W2 FSP=[YR=2006] W11
UOP=[YR=2006] N3 W3 N7 W2 N3 W20 S3 W2 S8 W3 S4 W3 S10 E15
N12 E18 $ W18 S12 E29 N12$ S6 E2$ W2 S6 W44$.

LAND DESCRIPTION

TOTAL OB/XF 17,108

LN	USE CODE	CLS	LAND USE DESCRIPTION	CAP	RD	LOC ZONE	FRONT	DEPTH	TOT LND UTS	UNIT TYPE	DT	DPTH FACT	% COND	TOT ADJ	UNIT PRICE	ADJ UNIT PRICE	LAND VALUE	OTHER ADJUSTMENTS AND NOTES	YEAR	DENSITY	DECL	FRZ	YR	CONSRV
1	000100	C	SFR	100		RSF-2	0.00	0.00	1.00	LT		1.00	1.00	1.00	325,000.00	325,000.00	325,000							

REVIEW DATE 01/31/2024 BY KBA Total Acres: 0.00 Total Land Value: 325,000 Market: 0 Agricultural: 0 Common: 325,000 PRINTED 08/06/2024 BY SYS