LOT 40 EX S-1
PLANTATION POINT PB 5/269

BURDICK WENDELLE L
1396 MISSION SAN CARLOS DR
FERNANDINA BEACH, FL 32034

2024

00-00-30-0518-0040-0000

BUILDING CHARACTERISTICS

ELEMENT	CD	CONSTRUCTION
Exterior Wall	16	WD FR STUC 100
Roof Structur	08	IRREGULAR 100
Roof Cover	03	COMP SHNGL 100
Interior Wall	05	DRYWALL 100
Interior Floo	11	CLAY TILE 50
Interior Floo	14	CARPET 50
Air Condition	03	CENTRAL 100
Heating Type	04	AIR DUCTED 100
Bedrooms		3 100
Bathrooms		3.5 100
Frame	02	WOOD FRAME 100
Stories	1.5	1.5 100
Units		0 100
Occupancy	00	NONE 100
Quality	01	Quality Level 01

DOR CODE 0100 SINGLE FAMILY
MAP NUM | MKT AREA 03
NEIGHBORHOOD/LOC 3036.00

AREA TYPE	TOTAL GROSS AREA	PCT OF BASE	TOT ADJ AREA	SUBAREA MARKET VALUE
BAS	2,761	100	2,761	298,913
FGR	777	55	427	46,228
FOP	136	30	41	4,439
FOP	222	30	67	7,254
FUS	360	100	360	38,974
PTO	12	5	1	108
PTO	373	5	19	2,057
TOTALS	4,641		3,676	397,974

MARKET ADJUSTMENTS

TYPE	MDL	EFF. AREA	TOT ADJ PTS	EFF. BASE RATE	REPL. COST NEW	AYB	EYB	ECON	FNCT		NORM	% COND
0900	01	3,676	95.1750	118.97	437,334	2005	2005	0	0	0	9.00	91.00

1 SNGL FAM – 100% - 2020 Heated Area: 3121 HX Base Yr 2020

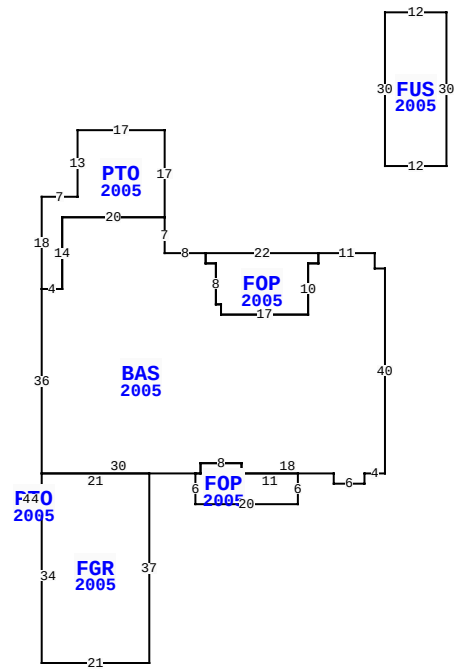

1396 MISSION SAN CARLOS DR, FERNANDINA BEACH

BLD DATE		LGL DATE	
XF DATE		LAND DATE	
INC DATE		AG DATE	

NASSAU COUNTY PROPERTY

PAGE 1 of 2 8

VALUATION SUMMARY

VALUATION BY		STANDARD
Tax Group: 8	Tax Dist:	
BUILDING MARKET VALUE		397,974
TOTAL MARKET OB/XF VALUE		39,236
TOTAL LAND VALUE - MARKET		350,000
TOTAL MARKET VALUE		787,210
SOH/AGL Deduction		106,818
ASSESSED VALUE		680,392
TOTAL EXEMPTION VALUE	HX HB	50,000
BASE TAXABLE VALUE		630,392
TOTAL JUST VALUE		787,210
NCON VALUE		0
INCOME VALUE		
PREVIOUS YEAR MKT VALUE		772,055

PERMIT NUM	DESCRIPTION	AMT	ISSUED
E22274	ELEC OTHER	0	12/01/2009
B0922919	ADDITION	9,675	10/01/2009
B15790	ADDITION	8,000	08/01/2005
R0507580	REPAIR/RRF	8,000	05/01/2005
M0509772	H/AC	0	05/01/2005
E14823	ELEC OTHER	4,500	04/01/2005

SALES DATA

OFF RECORD Number	DATE	TYPE INST	Q U	V I	RSN CD	SALE PRICE
2300/1546	8/27/2019	WD	Q	I	01	699,000
GRANTOR: MANUS KELLY & CHRISTO						
GRANTEE: BURDICK WENDELLE L						
2017/1655	12/07/2015	WD	Q	I	01	557,000
GRANTOR: CRAGER LIVING TRUST						
GRANTEE: HOVEY KELLY & BARBA						

BUILDING NOTES

BUILDING DIMENSIONS

BAS=[YR=2005] W2 N3 W11 FOP=[YR=2005] W22 S2 E2 S8 E1 S2 E17 N10 E2 N2$ S2 W2 S10 W17 N2 W1 N8 W2 N2 W8 N7 PTO=[YR=2005] N17 W17 S13 W7 S18 E4 N14 E20$ W20 S14 W4 S36 FGR=[YR=2005] S3 PTO=[YR=2005] W3 S4 E3 N4 $ S34 E21 N37 W21$ E30 FOP=[YR=2005] S6 E20 N6 W11 N2 W8 S2 W1$ E1 N2 E8 S2 E18 S2 E6 N2 E4 N40$ PTR=N20 FUS=[YR=2005] N30 E12 S30 W12$ S20$.

EXTRA FEATURES

LN	OB/XF CODE	DESCRIPTION	BLD	CAP	L	W	UNITS	UT	Adj R	ADJ UNIT PRICE	ORIG COND	YEAR ON	YEAR ACTUAL	Q	% COND	OB/XF MKT VALUE	NOTES
1	0500	FP-PRE FAB	0	100	0	0	1.00	UT	3,500.00	3,500.00	100	2005	2005	3	89	3,115	
2	0812	CONCRETE C	0	100	0	0	2,053.00	SF	4.00	4.00	100	2005	2005	3	86	7,062	
3	0810	CONCRETE A	0	100	4	2	8.00	SF	6.50	6.50	100	2005	2005	3	86	45	
4	0861	POOL GUNIT	0	100	0	0	383.00	SF	85.00	85.00	100	2005	2005	3	40	13,022	
5	0845	KOOL DECK	0	100	0	0	773.00	SF	7.25	7.25	100	2005	2005	3	86	4,820	
6	0910	SCRN RM L	0	100	0	0	982.00	SF	15.00	15.00	100	2005	2005	3	24	3,535	
7	1126	CB/STC 8"	0	100	0	0	51.00	SF	8.00	8.00	100	2005	2005	3	86	351	
8	0810	CONCRETE A	0	100	0	0	174.00	SF	6.50	6.50	100	2005	2005	3	86	973	
9	0600	SUMMER KIT	0	100	0	0	1.00	UT	7,500.00	7,500.00	100	2009	2009	3	40	3,000	
10	0475	VF 4 SBPL	0	100	0	0	26.00	LF	14.00	14.00	100	2009	2009	3	76	277	

TOTAL OB/XF 36,200

LAND DESCRIPTION

LN	USE CODE	CLS	LAND USE DESCRIPTION	CAP	RD	LOC ZONE	FRONT	DEPTH	TOT LND UTS	UNIT TYPE	DT	DPTH FACT	% COND	TOT ADJ	UNIT PRICE	ADJ UNIT PRICE	LAND VALUE	OTHER ADJUSTMENTS AND NOTES	YEAR	DENSITY	DECL	FRZ	YR	CONSRV
1	000100	C	SFR	100	0003	RSF-1	0.00	0.00	1.00	UT		1.00	1.00	1.00	350,000.00	350,000.00	350,000							

REVIEW DATE 05/12/2019 BY KBA Total Acres: 0.00 Total Land Value: 350,000 Market: 0 Agricultural: 0 Common: 350,000 PRINTED 08/06/2024 BY SYS

LOT 40 EX S-1
PLANTATION POINT PB 5/269

BURDICK WENDELLE L
1396 MISSION SAN CARLOS DR
FERNANDINA BEACH, FL 32034

2024

00-00-30-0518-0040-0000

NASSAU COUNTY PROPERTY

BUILDING CHARACTERISTICS

ELEMENT	CD	CONSTRUCTION

DOR CODE	0100	SINGLE FAMILY	
MAP NUM		MKT AREA	03
NEIGHBORHOOD/LOC	3036.00		

AREA TYPE	TOTAL GROSS AREA	PCT OF BASE	TOT ADJ AREA	SUBAREA MARKET VALUE
TOTALS				

MARKET ADJUSTMENTS

TYPE	MDL	EFF. AREA	TOT ADJ PTS	EFF. BASE RATE	REPL. COST NEW	AYB	EYB	ECON	FNCT		NORM	% COND

BLD DATE		LGL DATE	
XF DATE		LAND DATE	
INC DATE		AG DATE	

VALUATION SUMMARY

VALUATION BY		STANDARD
Tax Group: 8	Tax Dist:	
BUILDING MARKET VALUE		397,974
TOTAL MARKET OB/XF VALUE		39,236
TOTAL LAND VALUE - MARKET		350,000
TOTAL MARKET VALUE		787,210
SOH/AGL Deduction		106,818
ASSESSED VALUE		680,392
TOTAL EXEMPTION VALUE	HX HB	50,000
BASE TAXABLE VALUE		630,392
TOTAL JUST VALUE		787,210
NCON VALUE		0
INCOME VALUE		
PREVIOUS YEAR MKT VALUE		772,055

PERMIT NUM	DESCRIPTION	AMT	ISSUED
B14824	NEW CONSTR	330,000	03/01/2005
P09249	OTHER	0	03/01/2005
B0515379	SWIM POOL	40,981	01/01/2005

SALES DATA

OFF RECORD Number	DATE	TYPE INST	Q U /	V I /	RSN CD	SALE PRICE
2300/1546	8/27/2019	WD	Q	I	01	699,000
GRANTOR: MANUS KELLY & CHRISTO						
GRANTEE: BURDICK WENDELLE L						
2017/1655	12/07/2015	WD	Q	I	01	557,000
GRANTOR: CRAGER LIVING TRUST						
GRANTEE: HOVEY KELLY & BARBA						

BUILDING NOTES

BUILDING DIMENSIONS

EXTRA FEATURES

LN	OB/XF CODE	DESCRIPTION	BLD	CAP	L	W	UNITS	UT	Adj R	ADJ UNIT PRICE	ORIG COND	YEAR ON	YEAR ACTUAL	Q	% COND	OB/XF MKT VALUE	NOTES
11	0470	VNYL GATE	0	100	0	0	1.00	UT	300.00	300.00	100	2009	2009	3	76	228	
12	0910	SCRN RM L	0	100	0	0	468.00	SF	15.00	15.00	100	2009	2009	3	40	2,808	

LAND DESCRIPTION

TOTAL OB/XF 3,036

LN	USE CODE	CLS	LAND USE DESCRIPTION	CAP	RD	LOC ZONE	FRONT	DEPTH	TOT LND UTS	UNIT TYPE	DT	DPTH FACT	% COND	TOT ADJ	UNIT PRICE	ADJ UNIT PRICE	LAND VALUE	OTHER ADJUSTMENTS AND NOTES	YEAR	DENSITY	DECL	FRZ	YR	CONSRV

REVIEW DATE 05/12/2019 **BY** KBA Total Acres: 0.00 Total Land Value: 350,000 Market: 0 Agricultural: 0 Common: 350,000 **PRINTED** 08/06/2024 BY SYS