LOT 29
IN OR 1224/1893
PLANTATION POINT PB 5/269

JAHN RUSSELL A & INGEBORG E
1257 MISSION SAN CARLOS DRIVE
FERNANDINA BEACH, FL 32034

2024

00-00-30-0518-0029-0000

NASSAU COUNTY PROPERTY

BUILDING CHARACTERISTICS

ELEMENT	CD	CONSTRUCTION
Exterior Wall	05	AVERAGE 70
Exterior Wall	10	ABOVE AVG 30
Roof Structur	03	GABLE/HIP 100
Roof Cover	03	COMP SHNGL 100
Interior Wall	05	DRYWALL 100
Interior Floo	14	CARPET 80
Interior Floo	08	SHT VINYL 20
Air Condition	03	CENTRAL 100
Heating Type	04	AIR DUCTED 100
Bedrooms		3 100
Bathrooms		2 100
Frame	02	WOOD FRAME 100
Stories	1.	1. 100
Units		0 100
Occupancy	00	NONE 100
Quality	06	Quality Level 06
DOR CODE	0100	SINGLE FAMILY
MAP NUM		MKT AREA 03
NEIGHBORHOOD/LOC	3036.00	

AREA TYPE	TOTAL GROSS AREA	PCT OF BASE	TOT ADJ AREA	SUBAREA MARKET VALUE
BAS	2,096	100	2,096	319,749
FGR	484	55	266	40,579
FOP	36	30	11	1,678
FSP	198	40	79	12,052
PTO	55	5	3	458
UST	40	45	18	2,746
TOTALS	2,909		2,473	377,262

MARKET ADJUSTMENTS

TYPE	MDL	EFF. AREA	TOT ADJ PTS	EFF. BASE RATE	REPL. COST NEW	AYB	EYB	ECON	FNCT		NORM	% COND
0500	01	2,473	115.8096	173.71	429,585	1998	1998	0	0	0	12.18	87.82

1 SFR CUST – 100% - 2005 Heated Area: 2096 HX Base Yr 2005

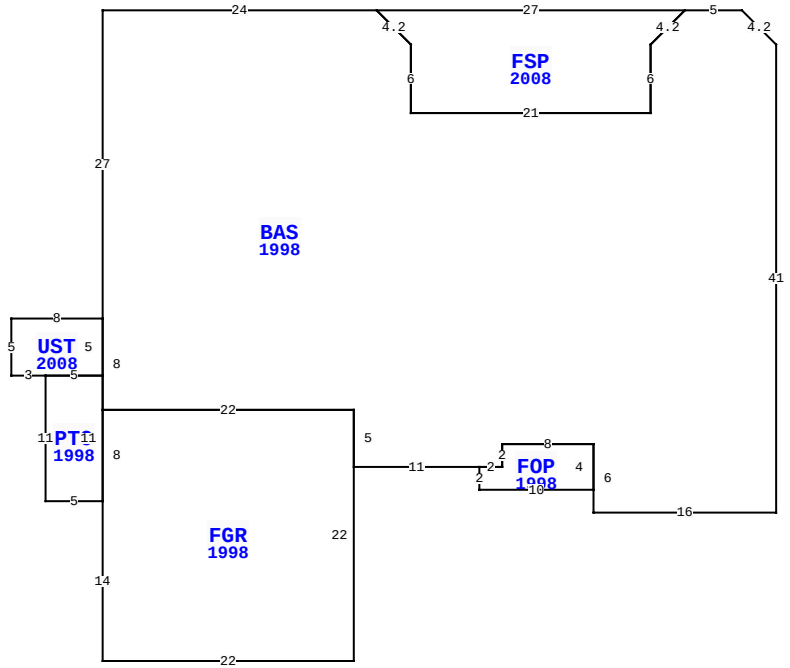

1257 MISSION SAN CARLOS DR, FERNANDINA BEACH

BLD DATE		LGL DATE	
XF DATE		LAND DATE	
INC DATE		AG DATE	

VALUATION SUMMARY

VALUATION BY		STANDARD
Tax Group: 8	Tax Dist:	
BUILDING MARKET VALUE		377,262
TOTAL MARKET OB/XF VALUE		4,691
TOTAL LAND VALUE - MARKET		350,000
TOTAL MARKET VALUE		731,953
SOH/AGL Deduction		438,750
ASSESSED VALUE		293,203
TOTAL EXEMPTION VALUE	HX HB	50,000
BASE TAXABLE VALUE		243,203
TOTAL JUST VALUE		731,953
NCON VALUE		0
INCOME VALUE		
PREVIOUS YEAR MKT VALUE		715,255

PERMIT NUM	DESCRIPTION	AMT	ISSUED
B9805032	NEW CONSTR	117,192	05/01/1998

SALES DATA

OFF RECORD Number	DATE	TYPE INST	Q / U	V / I	RSN CD	SALE PRICE
1224/1893	4/22/2004	WD	Q	I		250,000
GRANTOR: SETTLE WILLIAM H & AL						
GRANTEE: JAHN RUSSELL A & IN						
0778/0421	12/03/1996	WD	Q	V		27,500
GRANTOR: PLANTATION POINT JOIN						
GRANTEE: SETTLE WILLIAM H &						

BUILDING NOTES

BUILDING DIMENSIONS

BAS=[YR=1998] U3 L3 W5 FSP=[YR=2008] W27 D3 R3 S6 E21 N6 R3 U3 $ D3 L3 S6 W21 N6 L3 U3 W24 S27 UST=[YR=2008] W8 S5 E3 PTO=[YR=1998] S11 E5 FGR=[YR=1998] S14 E22 N22 W22 S8$ N11 W5$ E5 N5$ S8 E22 S5 E11 FOP=[YR=1998] S2 E10 N4 W8 S2 W2$ E2 N2 E8 S6 E16 N41$.

EXTRA FEATURES

LN	OB/XF CODE	DESCRIPTION	BLD	CAP	L	W	UNITS	UT	Adj R	ADJ UNIT PRICE	ORIG COND	YEAR ON	YEAR ACTUAL	Q	% COND	OB/XF MKT VALUE	NOTES
1	0810	CONCRETE A	0	100	0	0	673.00	SF	6.50	6.50	100	1998	1998	3	75	3,281	
2	0810	CONCRETE A	0	100	37	3	111.00	SF	6.50	6.50	100	1998	1998	3	75	541	
3	0858	SCULP CONC	0	100	5	4	20.00	SF	13.00	13.00	100	2005	2005	3	96	250	
4	0461	IRON FENCE	0	100	0	0	46.00	SF	8.50	8.50	100	1999	1999	3	83	325	
5	1125	CB/STC 6"	0	100	0	0	52.00	SF	7.35	7.35	100	1999	1999	3	77	294	

LAND DESCRIPTION

TOTAL OB/XF 4,691

LN	USE CODE	CLS	LAND USE DESCRIPTION	CAP	RD	LOC ZONE	FRONT	DEPTH	TOT LND UTS	UNIT TYPE	DT	DPTH FACT	% COND	TOT ADJ	UNIT PRICE	ADJ UNIT PRICE	LAND VALUE	OTHER ADJUSTMENTS AND NOTES	YEAR	DENSITY	DECL	FRZ	YR	CONSRV
1	000100	C	SFR	100	0003	RSF-1	0.00	0.00	1.00	UT		1.00	1.00	1.00	350,000.00	350,000.00	350,000							

REVIEW DATE 05/12/2019 BY KBA Total Acres: 0.00 Total Land Value: 350,000 Market: 0 Agricultural: 0 Common: 350,000 PRINTED 08/06/2024 BY SYS