LOT 17
IN OR 1654/1344
PLANTATION POINT PB 5/269

CARROLL CHARLES & MARY ELLEN
1240 HARRISON POINT TRL
FERNANDINA BEACH, FL 32034-5019

2024

00-00-30-0518-0017-0000

NASSAU COUNTY PROPERTY

BUILDING CHARACTERISTICS

ELEMENT	CD	CONSTRUCTION
Exterior Wall	16	WD FR STUC 100
Roof Structur	08	IRREGULAR 100
Roof Cover	03	COMP SHNGL 100
Interior Wall	05	DRYWALL 100
Interior Floo	12	HARDWOOD 50
Interior Floo	15	HARDTILE 50
Air Condition	03	CENTRAL 100
Heating Type	04	AIR DUCTED 100
Bedrooms		3 100
Bathrooms		4 100
Frame	02	WOOD FRAME 100
Stories	2.	2. 100
Units		0 100
Occupancy	00	NONE 100
Quality	06	Quality Level 06
DOR CODE	0100	SINGLE FAMILY
MAP NUM		MKT AREA 03
NEIGHBORHOOD/LOC	3036.00	

AREA TYPE	TOTAL GROSS AREA	PCT OF BASE	TOT ADJ AREA	SUBAREA MARKET VALUE
BAS	2,722	100	2,722	451,709
FGR	1,048	55	576	95,586
FOP	68	30	20	3,319
FOP	210	30	63	10,455
FOP	210	30	63	10,455
FOP	375	30	112	18,586
FST	42	55	23	3,816
FST	104	55	57	9,459
FST	148	55	81	13,442
FUS	1,160	100	1,160	192,499
TOTALS	6,421		4,938	819,450

MARKET ADJUSTMENTS

TYPE	MDL	EFF. AREA	TOT ADJ PTS	EFF. BASE RATE	REPL. COST NEW	AYB	EYB	ECON	FNCT		NORM	% COND
0500	01	4,938	117.6910	176.54	871,755	2011	2011	0	0	0	6.00	94.00

1 SFR CUST – 100% - 2012 Heated Area: 3882 HX Base Yr 2012

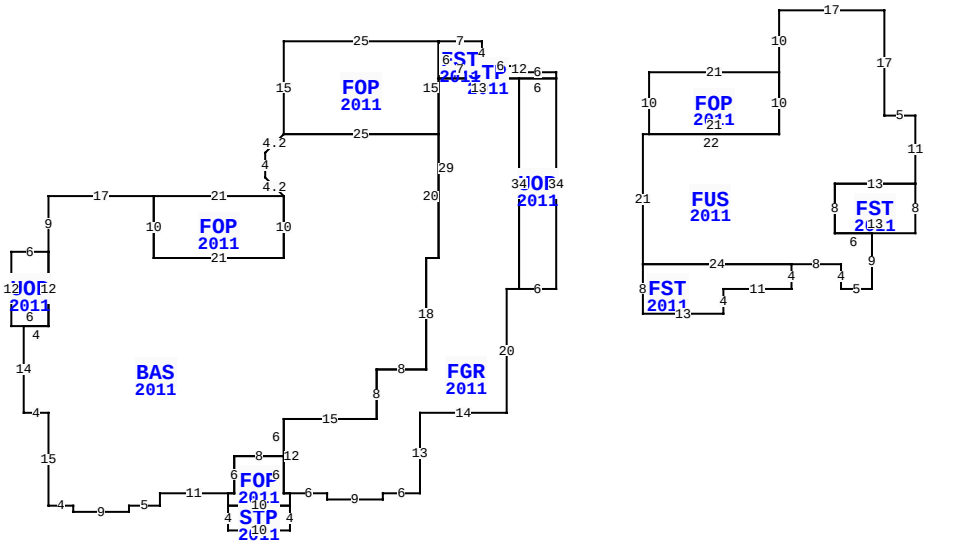

** This building has 14 Sub-Areas

1240 HARRISON POINT TR, FERNANDINA BEACH

BLD DATE		LGL DATE	
XF DATE		LAND DATE	
INC DATE		AG DATE	

VALUATION SUMMARY

VALUATION BY		STANDARD
Tax Group: 8	Tax Dist:	
BUILDING MARKET VALUE		819,450
TOTAL MARKET OB/XF VALUE		54,443
TOTAL LAND VALUE - MARKET		500,000
TOTAL MARKET VALUE		1,373,893
SOH/AGL Deduction		683,235
ASSESSED VALUE		690,658
TOTAL EXEMPTION VALUE	HX HB DD	60,000
BASE TAXABLE VALUE		630,658
TOTAL JUST VALUE		1,373,893
NCON VALUE		0
INCOME VALUE		
PREVIOUS YEAR MKT VALUE		1,339,753

PERMIT NUM	DESCRIPTION	AMT	ISSUED
B24394	XFOB	17,281	02/01/2011
E23179	ELEC OTHER	0	01/01/2011
G01582	GAS	1,695	11/01/2010
M15774	H/AC	0	11/01/2010
E23002	NEW CONSTR	0	10/01/2010
P14454	NEW CONSTR	0	09/01/2010

SALES DATA

OFF RECORD Number	DATE	TYPE INST	Q / U	V / I	RSN CD	SALE PRICE
1654/1344	12/18/2009	WD	Q	V	01	260,000
GRANTOR: CROWE MARY JANE						
GRANTEE: CARROLL CHARLES & M						
0780/0768	12/23/1996	WD	Q	V		85,000
GRANTOR: PLANTATION POINT JOIN						
GRANTEE: CROWE MARY JANE						

BUILDING NOTES

BUILDING DIMENSIONS

STP=[YR=2011] W6N1W6FST=[YR=2011] N4W7 FOP=[YR=2011]
W25S15BAS=[YR=2011] L3 D3 S4 R3 D3 FOP=[YR=2011]
W21S10E21N10$S10 W21N10W17S9UOP=[YR=2011] W6S12E6N12$
S12W4S14E4S15E4S1E9N1E5N2E11 FOP=[YR=2011] S2STP=[YR=2011]
S4E10N4W10$ E10N2FGR=[YR=2011] E6S1E9N1E6N13E14
N20E2UOP=[YR=2011] E6N34W6S34$N34W13 S29W2S18W8S8W15S12E1$
W1N6W8S6 W1$E1N6E8N6E15N8E8N18E2N20W25$
E25N15$S6E7N2$S2E12N1$ PTR=E15 FOP=[YR=2011] E21
FUS=[YR=2011] N10 E17 S17 E5 S11 FST=[YR=2011] S8 W13 N8 E13$
W13 S8 E6 S9 W5 N4 W8 FST=[YR=2011] S4 W11 S4 W13 N8 E24$ W24
N21 E22 N10$ S10 W21 N10$ W15 $.

EXTRA FEATURES

L N	OB/XF CODE	DESCRIPTION	BLD	CAP	L	W	UNITS	UT	Adj R	ADJ UNIT PRICE	ORIG COND	YEAR ON	YEAR ACTUAL	Q	% COND	OB/XF MKT VALUE	NOTES
1	0504	FP-ELECTRI	0	100	0	0	1.00	UT	2,000.00	2,000.00	100	2011	2011	3	94	1,880	
2	0861	POOL GUNIT	0	100	0	0	364.00	SF	85.00	85.00	100	2011	2011	3	64	19,802	
3	0877	JACUZZI	0	100	0	0	1.00	UT	1,000.00	1,000.00	100	2011	2011	3	50	500	
4	0911	SCRN RM A	0	100	0	0	1,075.00	SF	21.88	21.88	100	2011	2011	3	50	11,758	
5	0855	CONC PAVER	0	100	0	0	711.00	SF	10.00	10.00	100	2011	2011	3	92	6,541	
6	0855	CONC PAVER	0	100	0	0	2,168.00	SF	7.00	7.00	100	2011	2011	3	92	13,962	

LAND DESCRIPTION

TOTAL OB/XF 54,443

L N	USE CODE	CLS	LAND USE DESCRIPTION	CAP	R D	LOC ZONE	FRONT	DEPTH	TOT LND UTS	UNIT TYPE	D T	DPTH FACT	% COND	TOT ADJ	UNIT PRICE	ADJ UNIT PRICE	LAND VALUE	OTHER ADJUSTMENTS AND NOTES	YEAR	DENSITY	DECL	FRZ	YR	CONSRV
1	000116	C	SFR MARSH	100	0003	RSF-1	0.00	0.00	1.00	UT		1.00	1.00	1.00	500,000.00	500,000.00	500,000							

REVIEW DATE 05/12/2019 BY KBA Total Acres: 0.00 Total Land Value: 500,000 Market: 0 Agricultural: 0 Common: 500,000 PRINTED 08/06/2024 BY SYS