LOT 13
PLANTATION POINT PB 5/269

EBY MARK LEROY & JULIE ANNETTE L/E/
1256 HARRISON POINT TRAIL
FERNANDINA BEACH, FL 32034

2024

00-00-30-0518-0013-0000

NASSAU COUNTY PROPERTY

BUILDING CHARACTERISTICS

ELEMENT	CD	CONSTRUCTION
Exterior Wall	16	WD FR STUC 100
Roof Structur	03	GABLE/HIP 100
Roof Cover	03	COMP SHNGL 100
Interior Wall	05	DRYWALL 100
Interior Floo	14	CARPET 60
Interior Floo	11	CLAY TILE 40
Air Condition	03	CENTRAL 100
Heating Type	04	AIR DUCTED 100
Bedrooms		3 100
Bathrooms		3 100
Frame	02	WOOD FRAME 100
Stories	1.5	1.5 100
Units		0 100
Quality	01	Quality Level 01
DOR CODE	0100	SINGLE FAMILY
MAP NUM		MKT AREA 03
NEIGHBORHOOD/LOC	3036.00	

AREA TYPE	TOTAL GROSS AREA	PCT OF BASE	TOT ADJ AREA	SUBAREA MARKET VALUE
BAS	2,160	100	2,160	319,783
FGR	664	55	365	54,037
FOP	65	30	20	2,961
FOP	150	30	45	6,662
FUS	331	100	331	49,004
STP	16	10	2	296
STP	18	10	2	296
UOP	179	20	36	5,330
TOTALS	3,583		2,961	438,370

MARKET ADJUSTMENTS

TYPE	MDL	EFF. AREA	TOT ADJ PTS	EFF. BASE RATE	REPL. COST NEW	AYB	EYB	ECON	FNCT		NORM	% COND
0900	11	2,961	126.6706	158.34	468,845	2010	2010	0	0	0	6.50	93.50

1 SNGL FAM – 100% - 2016 Heated Area: 2491 HX Base Yr 2016

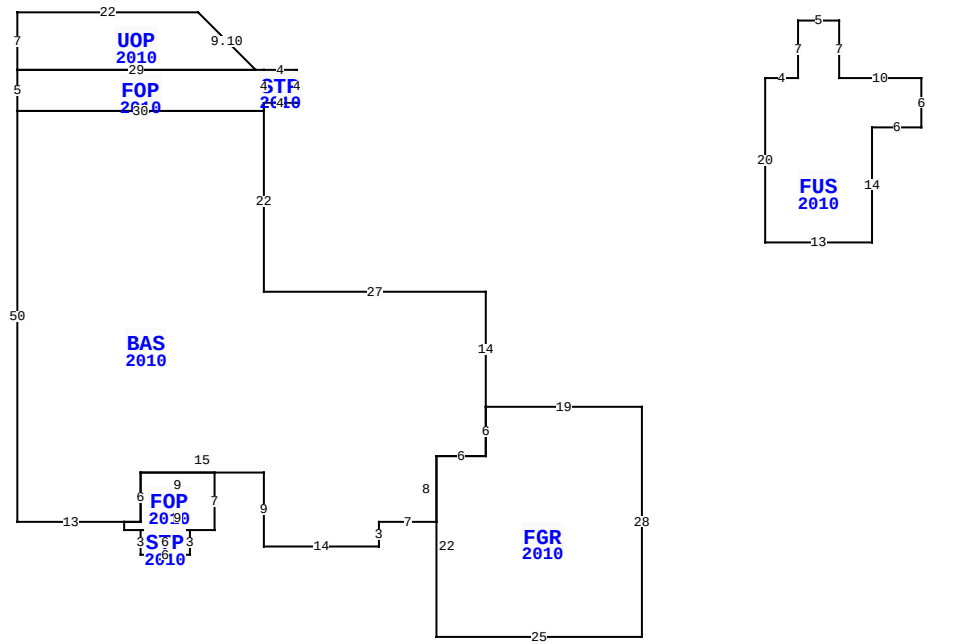

1256 HARRISON POINT TRL, FERNANDINA BEACH

BLD DATE		LGL DATE	
XF DATE		LAND DATE	
INC DATE		AG DATE	

VALUATION SUMMARY

VALUATION BY		STANDARD
Tax Group: 8	Tax Dist:	
BUILDING MARKET VALUE		438,370
TOTAL MARKET OB/XF VALUE		23,051
TOTAL LAND VALUE - MARKET		500,000
TOTAL MARKET VALUE		961,421
SOH/AGL Deduction		377,121
ASSESSED VALUE		584,300
TOTAL EXEMPTION VALUE	HX HB	50,000
BASE TAXABLE VALUE		534,300
TOTAL JUST VALUE		961,421
NCON VALUE		0
INCOME VALUE		
PREVIOUS YEAR MKT VALUE		827,209

PERMIT NUM	DESCRIPTION	AMT	ISSUED
B240001688	SRM 350FT	11,235	02/12/2024
B240000880	EXT PATIO AND SCR	23,850	01/24/2024
C23261	CO ISSUED	0	06/23/2010
B23684	XFOB	3,935	06/01/2010
G01517	GAS	695	04/01/2010
E22468	ELEC OTHER	0	03/01/2010

SALES DATA

OFF RECORD Number	DATE	TYPE INST	Q / U	V / I	RSN CD	SALE PRICE
2688/357	1/05/2023	LE	U	I	11	100
GRANTOR: EBY MARK LEROY & JULI						
GRANTEE: EBY ERIC NICHOLAS						
2003/1834	9/15/2015	WD	Q	I	02	680,000
GRANTOR: BRITT DAVID V B ET AL						
GRANTEE: EBY MARK LEROY & JU						

BUILDING NOTES

BUILDING DIMENSIONS

FGR=[YR=2010] W19 BAS=[YR=2010] N14 W27 N22 FOP=[YR=2010] N1 STP=[YR=2010] E4 N4 W4 S4$ N4 W1 UOP=[YR=2010] U7 L7 W22 S7 E29$ W29 S5 E30$ W30 S50 E13 FOP=[YR=2010] S1 E2 STP=[YR=2010] S3 E6 N3 W6$ E9 N7 W9 S6 W2$ E2 N6 E15 S9 E14 N3 E7 N8 E6 N6$ S6 W6 S22 E25 N28$ PTR=N20E15 FUS=[YR=2010] N20 E4 N7 E5 S7 E10 S6 W6 S14 W13$ W15 S20$.

EXTRA FEATURES

L N	OB/XF CODE	DESCRIPTION	BLD	CAP	L	W	UNITS	UT	Adj R	ADJ UNIT PRICE	ORIG COND	YEAR ON	YEAR ACTUAL	Q	% COND	OB/XF MKT VALUE	NOTES
1	0504	FP-ELECTRI	0	100	0	0	1.00	UT	2,000.00	2,000.00	100	2010	2010	3	94	1,880	
2	0855	CONC PAVER	0	100	0	0	1,510.00	SF	10.00	10.00	100	2010	2010	3	91	13,741	
3	0855	CONC PAVER	0	100	0	0	189.00	SF	10.00	10.00	100	2010	2010	3	91	1,720	
4	0855	CONC PAVER	0	100	0	0	206.00	SF	10.00	10.00	100	2010	2010	3	91	1,875	
5	0462	ST/AL FNC	0	100	88	0	352.00	SF	10.00	10.00	100	2010	2010	3	60	2,112	
6	0911	SCRN RM A	0	100	0	0	179.00	SF	17.50	17.50	100	2012	2012	3	55	1,723	

LAND DESCRIPTION

TOTAL OB/XF 23,051

L N	USE CODE	CLS	LAND USE DESCRIPTION	CAP	R D	LOC ZONE	FRONT	DEPTH	TOT LND UTS	UNIT TYPE	D T	DPTH FACT	% COND	TOT ADJ	UNIT PRICE	ADJ UNIT PRICE	LAND VALUE	OTHER ADJUSTMENTS AND NOTES	YEAR	DENSITY	DECL	FRZ	YR	CONSRV
1	000116	C	SFR MARSH	100	0003	RSF-1	0.00	0.00	1.00	UT		1.00	1.00	1.00	500,000.00	500,000.00	500,000							

REVIEW DATE 04/24/2024 BY DJ Total Acres: 0.00 Total Land Value: 500,000 Market: 0 Agricultural: 0 Common: 500,000 PRINTED 08/06/2024 BY SYS