LOT 11 & S-1 OF LOTS 10 & 12
IN OR 621 PG 1263
PLANTATION POINT PB 5/269

WRIGHT PATRICIA G
1264 HARRISON POINT TRAIL
FERNANDINA BEACH, FL 32034

2024

00-00-30-0518-0011-0000

NASSAU COUNTY PROPERTY

BUILDING CHARACTERISTICS

ELEMENT	CD	CONSTRUCTION
Exterior Wall	05	AVERAGE 60
Exterior Wall	20	FACE BRICK 40
Roof Structur	03	GABLE/HIP 100
Roof Cover	03	COMP SHNGL 100
Interior Wall	05	DRYWALL 100
Interior Floo	14	CARPET 60
Interior Floo	11	CLAY TILE 40
Air Condition	03	CENTRAL 100
Heating Type	04	AIR DUCTED 100
Bedrooms		3 100
Bathrooms		2.5 100
Frame	02	WOOD FRAME 100
Stories	1.	1. 100
Units		0 100
Occupancy	00	NONE 100
Quality	06	Quality Level 06
DOR CODE	0100	SINGLE FAMILY
MAP NUM		MKT AREA 03
NEIGHBORHOOD/LOC	3036.00	

AREA TYPE	TOTAL GROSS AREA	PCT OF BASE	TOT ADJ AREA	SUBAREA MARKET VALUE
BAS	2,376	100	2,376	356,840
FGR	544	55	299	44,906
FOP	35	30	10	1,502
FOP	176	30	53	7,959
PTO	116	5	6	901
USP	256	30	77	11,564
TOTALS	3,503		2,821	423,672

MARKET ADJUSTMENTS

TYPE	MDL	EFF. AREA	TOT ADJ PTS	EFF. BASE RATE	REPL. COST NEW	AYB	EYB	ECON	FNCT		NORM	% COND
0500	01	2,821	122.9856	184.48	520,418	1991	1991	0	0	0	18.59	81.41

1 SFR CUST – 100% - 1992 Heated Area: 2376 HX Base Yr 1992

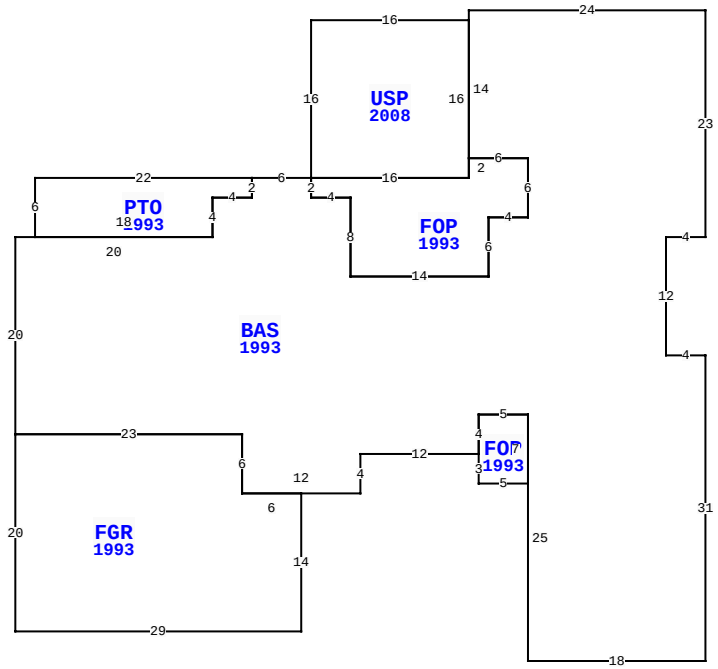

1264 HARRISON POINT TRL, FERNANDINA BEACH

BLD DATE		LGL DATE	
XF DATE		LAND DATE	
INC DATE		AG DATE	

VALUATION SUMMARY

VALUATION BY		STANDARD
Tax Group: 8	Tax Dist:	
BUILDING MARKET VALUE		423,672
TOTAL MARKET OB/XF VALUE		10,348
TOTAL LAND VALUE - MARKET		500,000
TOTAL MARKET VALUE		934,020
SOH/AGL Deduction		667,744
ASSESSED VALUE		266,276
TOTAL EXEMPTION VALUE	HX HB WX	55,000
BASE TAXABLE VALUE		211,276
TOTAL JUST VALUE		934,020
NCON VALUE		0
INCOME VALUE		
PREVIOUS YEAR MKT VALUE		799,879

PERMIT NUM	DESCRIPTION	AMT	ISSUED
7945	ADDITION	1,400	03/20/1992
6781	NEW CONSTR	96,850	10/08/1990

SALES DATA

OFF RECORD Number	DATE	TYPE INST	Q U	V I	RSN CD	SALE PRICE
0621/1263	3/19/1991	WD	Q	I		188,900
GRANTOR: COPPENBARGER HOMES						
GRANTEE: WRIGHT THOMAS & PAT						
0610/0172	10/18/1990	WD	Q	V		58,500
GRANTOR: PLANTATION POINT JNT						
GRANTEE: COPPENBARGER HOMES						

BUILDING NOTES

BUILDING DIMENSIONS

BAS=[YR=1993] W24 S1 USP=[YR=2008] W16 S16 FOP=[YR=1993] S2 E4 S8 E14 N6 E4 N6 W6 S2 W16$ E16 N16$ S14 E6 S6 W4 S6 W14 N8 W4 N2 W6 PTO=[YR=1993] W22 S6 E18 N4 E4 N2$ S2 W4 S4 W20 S20 FGR=[YR=1993] S20 E29 N14 W6 N6 W23$ E23 S6 E12 N4 E12 FOP=[YR=1993] S3 E5 N7 W5 S4$ N4 E5 S25 E18 N31 W4 N12 E4 N23$.

EXTRA FEATURES

LN	OB/XF CODE	DESCRIPTION	BLD	CAP	L	W	UNITS	UT	Adj R	ADJ UNIT PRICE	ORIG COND	YEAR ON	YEAR ACTUAL	Q	% COND	OB/XF MKT VALUE	NOTES
1	0500	FP-PRE FAB	0	100	0	0	1.00	UT	3,500.00	3,500.00	100	1991	1991	3	70	2,450	
2	0812	CONCRETE C	0	100	0	0	1,364.00	SF	4.00	4.00	100	1991	1991	3	62	3,383	
3	0858	SCULP CONC	0	100	0	0	347.00	SF	13.00	13.00	100	2003	2003	3	95	4,285	
4	1127	BRICK 8"	0	100	11	4	44.00	SF	5.50	5.50	100	2003	2003	3	95	230	

LAND DESCRIPTION

TOTAL OB/XF 10,348

LN	USE CODE	CLS	LAND USE DESCRIPTION	CAP	RD	LOC ZONE	FRONT	DEPTH	TOT LND UTS	UNIT TYPE	DT	DPTH FACT	% COND	TOT ADJ	UNIT PRICE	ADJ UNIT PRICE	LAND VALUE	OTHER ADJUSTMENTS AND NOTES	YEAR	DENSITY	DECL	FRZ	YR	CONSRV
1	000116	C	SFR MARSH	100	0003	RSF-1	0.00	0.00	1.00	UT		1.00	1.00	1.00	500,000.00	500,000.00	500,000							

REVIEW DATE 05/12/2019 BY KBA Total Acres: 0.00 Total Land Value: 500,000 Market: 0 Agricultural: 0 Common: 500,000 PRINTED 08/06/2024 BY SYS