12-2N-28 LOT 32 &
PT ABANDONED SANCHEZ ROAD
RESOLUTION PER OR 106/668

FLEMING JOHN T
1751 PHILIPS MANOR ROAD
FERNANDINA BEACH, FL 32034

2024

00-00-30-0480-0032-0000

NASSAU COUNTY PROPERTY

BUILDING CHARACTERISTICS

ELEMENT	CD	CONSTRUCTION
Exterior Wall	19	COMMON BRK 100
Roof Structur	03	GABLE/HIP 100
Roof Cover	03	COMP SHNGL 100
Interior Wall	05	DRYWALL 100
Interior Floo	07	CORK/VTILE 100
Air Condition	03	CENTRAL 100
Heating Type	04	AIR DUCTED 100
Bedrooms		3 100
Bathrooms		2 100
Frame	02	WOOD FRAME 100
Stories	1.	1. 100
Units		0 100
BUD8 Adjustme	05	DIST 1A 100
Occupancy	00	NONE 100
Quality	03	Quality Level 03

DOR CODE 0100 SINGLE FAMILY
MAP NUM | MKT AREA 03
NEIGHBORHOOD/LOC 3029.00

AREA TYPE	TOTAL GROSS AREA	PCT OF BASE	TOT ADJ AREA	SUBAREA MARKET VALUE
BAS	2,364	100	2,364	165,578
FOP	44	30	13	911
FSP	192	40	77	5,393
STP	40	10	4	280
UOP	156	20	31	2,172
TOTALS	2,796		2,489	174,333

MARKET ADJUSTMENTS

TYPE	MDL	EFF. AREA	TOT ADJ PTS	EFF. BASE RATE	REPL. COST NEW	AYB	EYB	ECON	FNCT		NORM	% COND
0100	01	2,489	115.2000	109.44	272,396	1971	1971	0	0	0	36.00	64.00

1 SINGLE FAM – 100% - 1988 Heated Area: 2364 HX Base Yr 1988

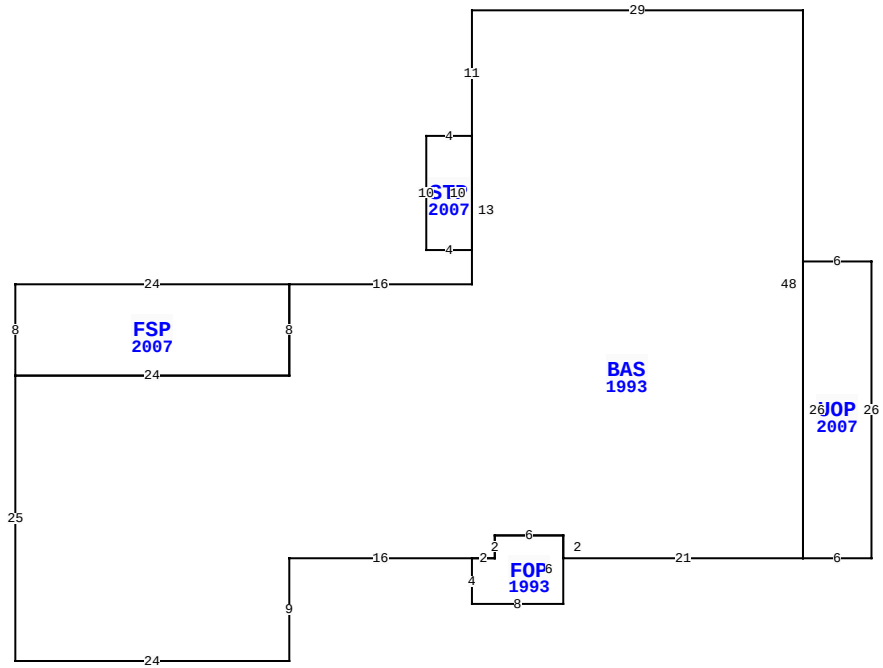

1751 PHILIPS MANOR RD, FERNANDINA BEACH

BLD DATE		LGL DATE	
XF DATE		LAND DATE	
INC DATE		AG DATE	

VALUATION SUMMARY

VALUATION BY		STANDARD
Tax Group: 8	Tax Dist:	
BUILDING MARKET VALUE		174,333
TOTAL MARKET OB/XF VALUE		8,178
TOTAL LAND VALUE - MARKET		250,000
TOTAL MARKET VALUE		432,511
SOH/AGL Deduction		285,165
ASSESSED VALUE		147,346
TOTAL EXEMPTION VALUE	HX HB WR	55,000
BASE TAXABLE VALUE		92,346
TOTAL JUST VALUE		432,511
NCON VALUE		0
INCOME VALUE		
PREVIOUS YEAR MKT VALUE		425,532

PERMIT NUM	DESCRIPTION	AMT	ISSUED

SALES DATA

OFF RECORD Number	DATE	TYPE INST	Q U	V I	RSN CD	SALE PRICE
1320/0951	5/26/2005	QC	U	I	01	100
GRANTOR: FLEMING JOHN T & JOAN						
GRANTEE: FLEMING SUSANNAH ET						
0511/0870	2/27/1987	PR	Q	I		93,000
GRANTOR:						
GRANTEE:						

BUILDING NOTES

BUILDING DIMENSIONS

BAS=[YR=1993] W29 S11 STP=[YR=2007] W4 S10 E4 N10$ S13 W16
FSP=[YR=2007] W24 S8 E24 N8$ S8 W24 S25 E24 N9 E16
FOP=[YR=1993] S4 E8 N6 W6 S2 W2$ E2 N2 E6 S2 E21
UOP=[YR=2007] E6 N26 W6 S26$ N48$.

EXTRA FEATURES

LN	OB/XF CODE	DESCRIPTION	BLD	CAP	L	W	UNITS	UT	Adj R	ADJ UNIT PRICE	ORIG COND	YEAR ON	YEAR ACTUAL	Q	% COND	OB/XF MKT VALUE	NOTES
1	0350	CARPORT WD	0	100	0	0	436.00	SF	13.00	13.00	100	1980	1980	3	20	1,134	
2	0940	SHEDS/PORT	0	100	12	7	84.00	SF	30.00	30.00	100	1998	1998	3	20	504	
3	0504	FP-ELECTRI	0	100	0	0	1.00	UT	2,000.00	2,000.00	100	1971	1971	3	31.2	624	
4	0810	CONCRETE A	0	100	0	0	219.00	SF	6.50	6.50	100	1983	1983	3	41	584	
5	0811	CONCRETE B	0	100	0	0	531.00	SF	5.20	5.20	100	1983	1983	3	41	1,132	
6	0812	CONCRETE C	0	100	0	0	2,561.00	SF	4.00	4.00	100	1983	1983	3	41	4,200	

LAND DESCRIPTION

TOTAL OB/XF 8,178

LN	USE CODE	CLS	LAND USE DESCRIPTION	CAP	RD	LOC ZONE	FRONT	DEPTH	TOT LND UTS	UNIT TYPE	DT	DPTH FACT	% COND	TOT ADJ	UNIT PRICE	ADJ UNIT PRICE	LAND VALUE	OTHER ADJUSTMENTS AND NOTES	YEAR	DENSITY	DECL	FRZ	YR	CONSRV
1	000100	C	SFR	100		RSF-1	0.00	0.00	1.00	LT		1.00	1.00	1.00	250,000.00	250,000.00	250,000							

REVIEW DATE 05/12/2019 BY KBA Total Acres: 0.00 Total Land Value: 250,000 Market: 0 Agricultural: 0 Common: 250,000 PRINTED 08/06/2024 BY SYS