12-2N-28 LOTS 24 & W1/2 OF 25
IN OR 2442/655
PHILIPS MANOR SUB PB 2/78

STEELE BRYAN & RACHEL D
1709 PHILIPS MANOR ROAD
FERNANDINA BEACH, FL 32034

2024

00-00-30-0480-0024-0000

NASSAU COUNTY PROPERTY

BUILDING CHARACTERISTICS

ELEMENT	CD	CONSTRUCTION
Exterior Wall	10	ABOVE AVG 100
Roof Structur	03	GABLE/HIP 100
Roof Cover	03	COMP SHNGL 100
Interior Wall	05	DRYWALL 100
Interior Floo	12	HARDWOOD 50
Interior Floo	14	CARPET 50
Air Condition	03	CENTRAL 100
Heating Type	04	AIR DUCTED 100
Bedrooms		4 100
Bathrooms		3.5 100
Frame	02	WOOD FRAME 100
Stories	2.	2. 100
Units		0 100
Occupancy	00	NONE 100
Quality	04	Quality Level 04

DOR CODE 0100 SINGLE FAMILY
MAP NUM | MKT AREA 03
NEIGHBORHOOD/LOC 3029.00

AREA TYPE	TOTAL GROSS AREA	PCT OF BASE	TOT ADJ AREA	SUBAREA MARKET VALUE
BAS	1,742	100	1,742	215,780
DCK	558	10	56	6,937
FGR	551	55	303	37,532
FOP	570	30	171	21,181
FUS	864	100	864	107,023
SFB	361	80	289	35,798
UOP	12	20	2	247
UOP	16	20	3	372
TOTALS	4,674		3,430	424,870

MARKET ADJUSTMENTS

TYPE	MDL	EFF. AREA	TOT ADJ PTS	EFF. BASE RATE	REPL. COST NEW	AYB	EYB	ECON	FNCT		NORM	% COND
0900	01	3,430	107.7090	134.64	461,815	2006	2006	0	0	0	8.00	92.00

1 SNGL FAM – 100% - 2007 Heated Area: 2895 HX Base Yr 2007

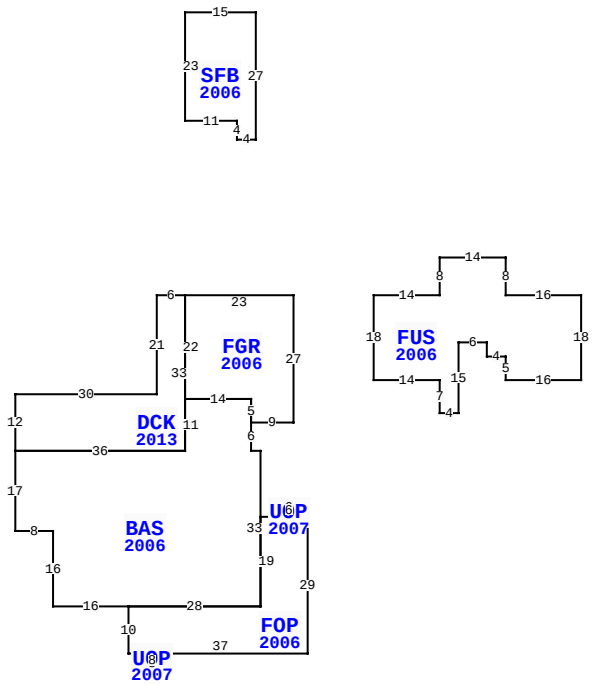

1709 PHILIPS MANOR RD, FERNANDINA BEACH

BLD DATE	02/22/2007	0	LGL DATE
XF DATE			LAND DATE
INC DATE			AG DATE

VALUATION SUMMARY

VALUATION BY		STANDARD
Tax Group: 8	Tax Dist:	
BUILDING MARKET VALUE		424,870
TOTAL MARKET OB/XF VALUE		49,794
TOTAL LAND VALUE - MARKET		337,500
TOTAL MARKET VALUE		812,164
SOH/AGL Deduction		391,266
ASSESSED VALUE		420,898
TOTAL EXEMPTION VALUE	HX HB	50,000
BASE TAXABLE VALUE		370,898
TOTAL JUST VALUE		812,164
NCON VALUE		0
INCOME VALUE		
PREVIOUS YEAR MKT VALUE		795,277

PERMIT NUM	DESCRIPTION	AMT	ISSUED
B1327144	SWIM POOL	29,500	05/01/2013
E1326142	WIREPOOL	0	05/01/2013
E15915	ELEC OTHER	2,000	10/01/2005
M10486	MECH OTHER	0	10/01/2005
E15611	ELEC OTHER	0	08/01/2005
P09145	OTHER	0	03/01/2005

SALES DATA

OFF RECORD Number	DATE	TYPE INST	Q U	V I	RSN CD	SALE PRICE
2442/0655	3/03/2021	WD	U	I	30	94,900
GRANTOR: STEELE BRYAN						
GRANTEE: STEELE BRYAN & RACH						
1113/1774	2/13/2003	WD	Q	V		85,000
GRANTOR: LANGSHAW COLEMAN C &						
GRANTEE: STEELE BRYAN						

BUILDING NOTES

BUILDING DIMENSIONS

DCK=[YR=2013] W6 S21 W30 S12 BAS=[YR=2006] S17 E8 S16 E16
FOP=[YR=2006] S10 E1 UOP=[YR=2007] S2 E8 N2 W8$ E37 N29 W1
UOP=[YR=2007] N2 W6 S2 E6$ W9 S19 W28$ E28 N33 W2 N6
FGR=[YR=2006] E9 N27 W23 S22 E14 S5$ N5 W14 S11 W36$ E36
N33$PTR=[YR=2006] E40 FUS=[YR=2006] E14 N8 E14 S8 E16 S18
W16 N5 W4 N3 W6 S15 W4 N7 W14 N18$ W40$ PTR=[YR=2006] N60
SFB=[YR=2006] E15 S27 W4 N4 W11 N23$S60$.

EXTRA FEATURES

LN	OB/XF CODE	DESCRIPTION	BLD	CAP	L	W	UNITS	UT	Adj R	ADJ UNIT PRICE	ORIG COND	YEAR ON	YEAR ACTUAL	Q	% COND	OB/XF MKT VALUE	NOTES
1	0500	FP-PRE FAB	0	100	0	0	1.00	UT	3,500.00	3,500.00	100	2006	2006	3	90	3,150	
2	0812	CONCRETE C	0	100	0	0	1,632.00	SF	4.00	4.00	100	2006	2006	3	87	5,679	
3	0940	SHEDS/PORT	0	100	12	14	168.00	SF	30.00	30.00	100	2008	2008	3	35	1,764	
4	0812	CONCRETE C	0	100	0	0	2,328.00	SF	4.00	4.00	100	2008	2008	3	89	8,288	
5	0861	POOL GUNIT	0	100	0	0	484.00	SF	85.00	85.00	100	2013	2013	3	71	29,209	
6	0462	ST/AL FNC	0	100	0	0	240.00	SF	10.00	10.00	100	2013	2013	3	71	1,704	

LAND DESCRIPTION

TOTAL OB/XF 49,794

LN	USE CODE	CLS	LAND USE DESCRIPTION	CAP	RD	LOC ZONE	FRONT	DEPTH	TOT LND UTS	UNIT TYPE	DT	DPTH FACT	% COND	TOT ADJ	UNIT PRICE	ADJ UNIT PRICE	LAND VALUE	OTHER ADJUSTMENTS AND NOTES	YEAR	DENSITY	DECL	FRZ	YR	CONSRV
1	000100	C	SFR	100		RSF-1	150.00	180.00	1.50	LT		1.00	1.00	0.90	250,000.00	225,000.00	337,500							

REVIEW DATE 08/15/2019 BY DJA Total Acres: 0.00 Total Land Value: 337,500 Market: 0 Agricultural: 0 Common: 337,500 PRINTED 08/06/2024 BY SYS