LOT 10
IN OR 675 PG 1709
OCEAN DUNES PB 4/54

SMITH MALLORY S TRUST/SMITH MALLORY S TRUSTEE
P O BOX 16809
FERNANDINA BEACH, FL 32035-3131

2024

00-00-30-0450-0010-0000

NASSAU COUNTY PROPERTY

BUILDING CHARACTERISTICS

ELEMENT	CD	CONSTRUCTION
Exterior Wall	10	ABOVE AVG 60
Exterior Wall	17	CB STUCCO 40
Roof Structur	08	IRREGULAR 100
Roof Cover	07	CONC TILE 100
Interior Wall	05	DRYWALL 100
Interior Floo	12	HARDWOOD 70
Interior Floo	14	CARPET 30
Air Condition	03	CENTRAL 100
Heating Type	04	AIR DUCTED 100
Bedrooms		3 100
Bathrooms		4.5 100
Frame	02	WOOD FRAME 100
Stories	2.	2. 100
Units		0 100
BUD8 Adjustme	05	DIST 1A 100
Quality	04	Quality Level 04
DOR CODE	0100	SINGLE FAMILY
MAP NUM		MKT AREA 03
NEIGHBORHOOD/LOC	1053.00	

AREA TYPE	TOTAL GROSS AREA	PCT OF BASE	TOT ADJ AREA	SUBAREA MARKET VALUE
BAS	1,712	100	1,712	287,607
BAS	160	100	160	26,879
BAS	188	100	188	31,583
FBM	1,516	80	1,213	203,777
FGR	612	55	337	56,614
FOP	42	30	13	2,184
FOP	210	30	63	10,583
FUS	984	100	984	165,307
STR	132	10	13	2,184
UOP	538	20	108	18,143
TOTALS	6,094		4,791	804,861

MARKET ADJUSTMENTS

TYPE	MDL	EFF. AREA	TOT ADJ PTS	EFF. BASE RATE	REPL. COST NEW	AYB	EYB	ECON	FNCT		NORM	% COND
0500	11	4,791	132.9319	199.40	955,325	1986	1990	0	0	0	15.75	84.25

1 SFR CUST – 100% - 2001 Heated Area: 4257 HX Base Yr 2001

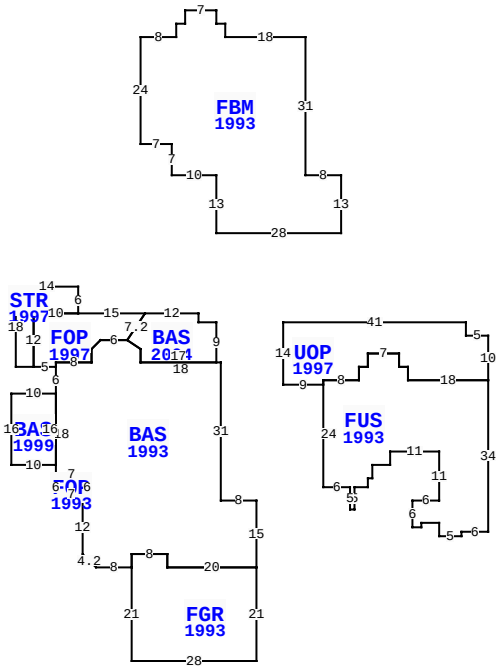

4444 S FLETCHER AVE, FERNANDINA BEACH

BLD DATE		LGL DATE	
XF DATE		LAND DATE	
INC DATE		AG DATE	

VALUATION SUMMARY

VALUATION BY		STANDARD
Tax Group: 8	Tax Dist:	
BUILDING MARKET VALUE		804,861
TOTAL MARKET OB/XF VALUE		8,537
TOTAL LAND VALUE - MARKET		1,410,420
TOTAL MARKET VALUE		2,223,818
SOH/AGL Deduction		1,239,275
ASSESSED VALUE		984,543
TOTAL EXEMPTION VALUE	HX HB	50,000
BASE TAXABLE VALUE		934,543
TOTAL JUST VALUE		2,223,818
NCON VALUE		0
INCOME VALUE		
PREVIOUS YEAR MKT VALUE		2,187,025

PERMIT NUM	DESCRIPTION	AMT	ISSUED
B970612	REPAIR/RRF	15,000	06/01/1997
B9703850	REPAIR/RRF	65,000	04/01/1997

SALES DATA

OFF RECORD Number	DATE	TYPE INST	Q U	V I	RSN CD	SALE PRICE
0675/1709	2/23/1993	WD	Q	I		520,000
GRANTOR: CORY EDWARD & V						
GRANTEE: SMITH MALLORY TRUST						
0437/0155	10/01/1984	WD	Q	V		110,000
GRANTOR:						
GRANTEE:						

BUILDING NOTES

BUILDING DIMENSIONS

BAS=[YR=2004] W4 N2 W12 FOP=[YR=1997] W15 STR=[YR=1997] N6 W14 S18 E4 N12 E10$ W10 S12 E5 BAS=[YR=1993] S6 BAS=[YR=1999] W10 S16 E10 N16$ S18 FOP=[YR=1993] S6 E7 N6 W7$ E7 S6 W1 S12 D3 R3 E8 FGR=[YR=1993] S21 E28 N21 W20 N3 W8 S3$ N3 E8 S3 E20 N15 W8 N31 W18 N3 U2 L3 W6 D2 L2 S3 W8 S1$ N1E8 N3 R2 U2 E6 U6 R4 $ D6 L4 D2 R3 S3 E17 N9$ PTR= E15 UOP=[YR=1997] E41 S3 E5 S10 FUS=[YR=1993] S34 W6 S1 W5 N3 W4 S1 W2 N6 E6 N11 W11 S3 W4 S3 W1 S2 W3 S5 W1 N5W6 N24 E8 N3 E2 N3 E7 S3 E2 S3 E18$ W18 N3 W2 N3 W7 S3 W2 S3 W8 S1 W9 N14$ W15$ PTR=N20 FBM=[YR=1993] N13 W10 N7 W7 N24 E8 N3 E2 N3 E7 S3 E2 S3 E18 S31 E8S13 W28$ S20$.

EXTRA FEATURES

LN	OB/XF CODE	DESCRIPTION	BLD	CAP	L	W	UNITS	UT	Adj R	ADJ UNIT PRICE	ORIG COND	YEAR ON	YEAR ACTUAL	Q	% COND	OB/XF MKT VALUE	NOTES
1	0812	CONCRETE C	0	100	0	0	1,565.00	SF	4.00	4.00	100	1986	1986	3	49.5	3,099	
2	0504	FP-ELECTRI	0	100	0	0	1.00	UT	2,000.00	2,000.00	100	1986	1986	3	60	1,200	
3	1126	CB/STC 8"	0	100	0	0	240.00	SF	8.00	8.00	100	1986	1986	3	49.5	950	
4	0415	BEACHWALK	0	100	218	4	872.00	SF	5.75	5.75	100	1988	1988	3	20	1,003	
5	0810	CONCRETE A	0	100	51	3	24.00	SF	6.50	6.50	100	1986	1986	3	49.5	77	
6	0811	CONCRETE B	0	100	0	0	488.00	SF	5.20	5.20	100	2006	2006	3	87	2,208	

LAND DESCRIPTION

TOTAL OB/XF 8,537

LN	USE CODE	CLS	LAND USE DESCRIPTION	CAP	RD	LOC ZONE	FRONT	DEPTH	TOT LND UTS	UNIT TYPE	DT	DPTH FACT	% COND	TOT ADJ	UNIT PRICE	ADJ UNIT PRICE	LAND VALUE	OTHER ADJUSTMENTS AND NOTES	YEAR	DENSITY	DECL	FRZ	YR	CONSRV
1	000120	C	SFR OCN FT	100		RSF-1	85.00	400.00	85.48	FF		1.00	1.00	1.00	16,500.00	16,500.00	1,410,420							

REVIEW DATE 04/22/2020 BY DJA Total Acres: 0.00 Total Land Value: 1,410,420 Market: 0 Agricultural: 0 Common: 1,410,420 PRINTED 08/06/2024 BY SYS