LOT 55
DUNES OF AMELIA PHASE 2
PBK 8/280

STEFFECK NICOLE ANN
197 SARGASSO ST
FERNANDINA BEACH, FL 32034

2024

00-00-30-044D-0055-0000

BUILDING CHARACTERISTICS

ELEMENT	CD	CONSTRUCTION
Exterior Wall	10	ABOVE AVG 100
Roof Structur	03	GABLE/HIP 100
Roof Cover	03	COMP SHNGL 100
Interior Wall	05	DRYWALL 100
Interior Floo	11	CLAY TILE 90
Interior Floo	14	CARPET 10
Air Condition	03	CENTRAL 100
Heating Type	04	AIR DUCTED 100
Bedrooms		4 100
Bathrooms		4 100
Frame	02	WOOD FRAME 100
Stories	2.	2. 100
Units		0 100
Occupancy	00	NONE 100
Quality	06	Quality Level 06

DOR CODE 0100 SINGLE FAMILY
MAP NUM | MKT AREA 01
NEIGHBORHOOD/LOC 2121.100

AREA TYPE	TOTAL GROSS AREA	PCT OF BASE	TOT ADJ AREA	SUBAREA MARKET VALUE
BAS	1,552	100	1,552	253,462
FGR	452	55	249	40,665
FOP	96	30	29	4,736
FOP	108	30	32	5,226
FOP	200	30	60	9,799
FUS	1,070	100	1,070	174,745
STR	30	10	3	490
TOTALS	3,508		2,995	489,122

MARKET ADJUSTMENTS

TYPE	MDL	EFF. AREA	TOT ADJ PTS	EFF. BASE RATE	REPL. COST NEW	AYB	EYB	ECON	FNCT		NORM	% COND
0900	01	2,995	132.6387	165.80	496,571	2019	2019	0	0	0	1.50	98.50

1 SNGL FAM – 100% - 2023 Heated Area: 2622 HX Base Yr 2023

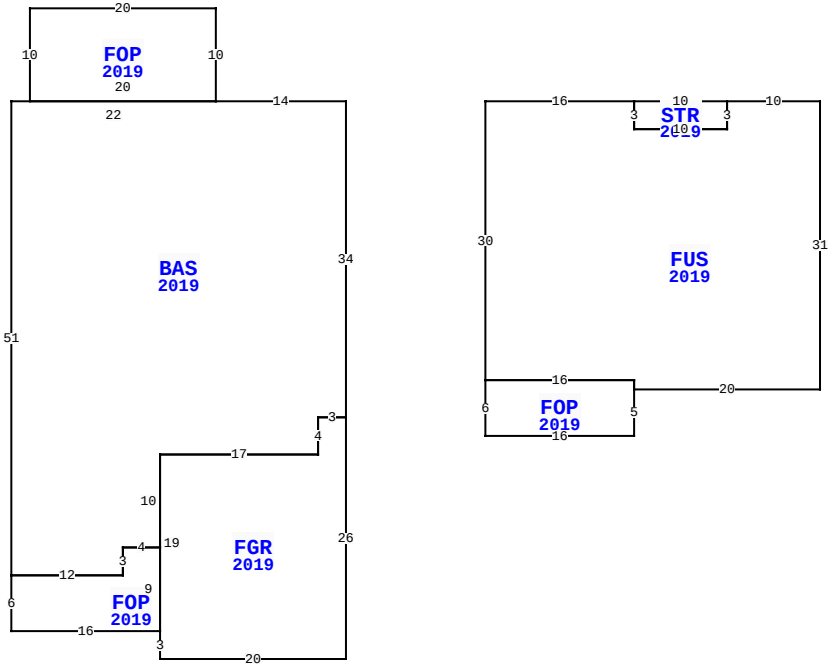

197 SARGASSO ST, FERNANDINA BEACH

BLD DATE		LGL DATE	
XF DATE		LAND DATE	03/13/2024 MLU
INC DATE		AG DATE	

NASSAU COUNTY PROPERTY

PAGE 1 of 1 2

VALUATION SUMMARY

VALUATION BY		STANDARD
Tax Group: 2	Tax Dist:	
BUILDING MARKET VALUE		489,122
TOTAL MARKET OB/XF VALUE		6,281
TOTAL LAND VALUE - MARKET		150,000
TOTAL MARKET VALUE		645,403
SOH/AGL Deduction		39,381
ASSESSED VALUE		606,022
TOTAL EXEMPTION VALUE	HX HB	50,000
BASE TAXABLE VALUE		556,022
TOTAL JUST VALUE		645,403
NCON VALUE		0
INCOME VALUE		
PREVIOUS YEAR MKT VALUE		588,371

PERMIT NUM	DESCRIPTION	AMT	ISSUED
20190384	CO ISSUED	0	12/30/2019
20190384	NEW CONSTR	0	07/05/2019

SALES DATA

OFF RECORD Number	DATE	TYPE INST	Q U	V I	RSN CD	SALE PRICE
2595/0307	10/07/2022	WD	Q	I	02	795,000
GRANTOR: PRASKOVICH ALISA L &						
GRANTEE: STEFFECK NICOLE ANN						
2337/0567	1/31/2020	WD	Q	I	01	393,100
GRANTOR: NEW ATLANTIC BUILDERS						
GRANTEE: PRASKOVICH ALISA L						

BUILDING NOTES

BUILDING DIMENSIONS

BAS=[YR=2019] W14 FOP=[YR=2019] N10 W20 S10 E20$ W22 S51
FOP=[YR=2019] S6 E16 FGR=[YR=2019] S3 E20 N26 W3 S4 W17 S19$
N9 W4 S3 W12$ E12 N3 E4 N10 E17 N4 E3 N34$ PTR=E15
FUS=[YR=2019] E16 STR=[YR=2019] E10 S3 W10 N3$ S3 E10 N3 E10
S31 W20 FOP=[YR=2019] S5 W16 N6 E16 S1$ N1 W16 N30$ W15$.

EXTRA FEATURES

LN	OB/XF CODE	DESCRIPTION	BLD	CAP	L	W	UNITS	UT	Adj R	ADJ UNIT PRICE	ORIG COND	YEAR ON	YEAR ACTUAL	Q	% COND	OB/XF MKT VALUE	NOTES
1	0855	CONC PAVER	0	100	0	0	608.00	SF	10.00	10.00	100	2019	2019	3	98	5,958	
2	0855	CONC PAVER	0	100	0	0	33.00	SF	10.00	10.00	100	2019	2019	3	98	323	

LAND DESCRIPTION

TOTAL OB/XF 6,281

LN	USE CODE	CLS	LAND USE DESCRIPTION	CAP	RD	LOC ZONE	FRONT	DEPTH	TOT LND UTS	UNIT TYPE	DT	DPTH FACT	% COND	TOT ADJ	UNIT PRICE	ADJ UNIT PRICE	LAND VALUE	OTHER ADJUSTMENTS AND NOTES	YEAR	DENSITY	DECL	FRZ	YR	CONSRV
1	000100	C	SFR	100		RLM	0.00	0.00	1.00	LT		1.00	1.00	1.00	150,000.00	150,000.00	150,000							

REVIEW DATE 12/18/2019 BY DJ Total Acres: 0.00 Total Land Value: 150,000 Market: 0 Agricultural: 0 Common: 150,000 PRINTED 08/06/2024 BY SYS