LOT 50
DUNES OF AMELIA PHASE 1
PBK 8/88

WRYE BARBARA L/E/
327 SARGASSO ST
FERNANDINA BEACH, FL 32034

2024

00-00-30-044D-0050-0000

BUILDING CHARACTERISTICS

ELEMENT	CD	CONSTRUCTION
Exterior Wall	10	ABOVE AVG 100
Roof Structur	08	IRREGULAR 100
Roof Cover	03	COMP SHNGL 100
Interior Wall	05	DRYWALL 100
Interior Floo	11	CLAY TILE 50
Interior Floo	14	CARPET 50
Air Condition	03	CENTRAL 100
Heating Type	04	AIR DUCTED 100
Bedrooms		4 100
Bathrooms		3 100
Frame	02	WOOD FRAME 100
Stories	1.5	1.5 100
Units		0 100
Occupancy	00	NONE 100
Quality	06	Quality Level 06
DOR CODE	0100	SINGLE FAMILY
MAP NUM		MKT AREA 01
NEIGHBORHOOD/LOC	2121.00	

AREA TYPE	TOTAL GROSS AREA	PCT OF BASE	TOT ADJ AREA	SUBAREA MARKET VALUE
BAS	1,918	100	1,918	307,378
FGR	440	55	242	38,783
FOP	48	30	14	2,243
FSP	208	40	83	13,302
FUS	372	100	372	59,616
STR	44	10	4	641
TOTALS	3,030		2,633	421,963

MARKET ADJUSTMENTS

TYPE	MDL	EFF. AREA	TOT ADJ PTS	EFF. BASE RATE	REPL. COST NEW	AYB	EYB	ECON	FNCT		NORM	% COND
0900	01	2,633	130.8240	163.53	430,574	2018	2018	0	0	0	2.00	98.00

1 SNGL FAM – 100% - 2019 Heated Area: 2290 HX Base Yr 2019

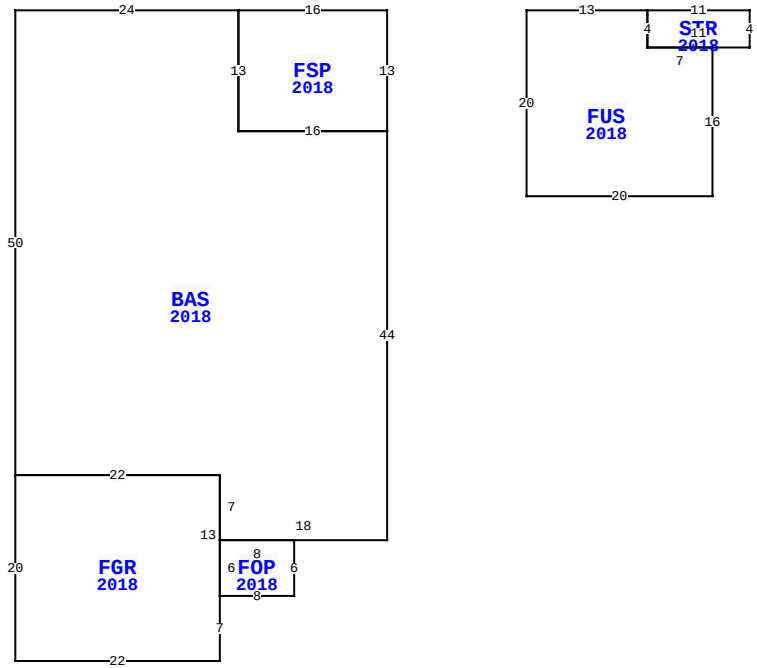

327 SARGASSO ST, FERNANDINA BEACH

BLD DATE		LGL DATE	
XF DATE		LAND DATE	03/13/2024 MLU
INC DATE		AG DATE	

NASSAU COUNTY PROPERTY

PAGE 1 of 1 2

VALUATION SUMMARY

VALUATION BY		STANDARD
Tax Group: 2	Tax Dist:	
BUILDING MARKET VALUE		421,963
TOTAL MARKET OB/XF VALUE		5,195
TOTAL LAND VALUE - MARKET		150,000
TOTAL MARKET VALUE		577,158
SOH/AGL Deduction		291,093
ASSESSED VALUE		286,065
TOTAL EXEMPTION VALUE	HX HB WX	55,000
BASE TAXABLE VALUE		231,065
TOTAL JUST VALUE		577,158
NCON VALUE		0
INCOME VALUE		
PREVIOUS YEAR MKT VALUE		523,149

PERMIT NUM	DESCRIPTION	AMT	ISSUED
20180123	CO ISSUED	0	06/08/2018
20180123	NEW CONSTR	291,972	01/12/2018

SALES DATA

OFF RECORD Number	DATE	TYPE INST	Q U /	V I /	RSN CD	SALE PRICE
2711/1962	5/15/2024	LE	U	I	11	0
GRANTOR: WRYE BARBARA A						
GRANTEE: KIRKLAND TONYA LYNN						
2204/0515	6/15/2018	WD	Q	I	02	412,800
GRANTOR: DREAM FINDERS HOMES L						
GRANTEE: WRYE CHARLES & BARB						

BUILDING NOTES

BUILDING DIMENSIONS

FSP=[YR=2018] W16 BAS=[YR=2018] W24 S50 FGR=[YR=2018] S20 E22 N7 FOP=[YR=2018] E8 N6 W8 S6$ N13 W22$ E22 S7 E18 N44 W16 N13$ S13 E16 N13$ PTR= E15 FUS=[YR=2018] E13 STR=[YR=2018] E11 S4 W11 N4$ S4 E7 S16 W20 N20$ W15 $.

EXTRA FEATURES

LN	OB/XF CODE	DESCRIPTION	BLD	CAP	L	W	UNITS	UT	Adj R	ADJ UNIT PRICE	ORIG COND	YEAR ON	YEAR ACTUAL	Q	% COND	OB/XF MKT VALUE	NOTES
1	0855	CONC PAVER	0	100	0	0	648.00	SF	7.00	7.00	100	2018	2018	3	97	4,400	
2	0855	CONC PAVER	0	100	0	0	45.00	SF	7.00	7.00	100	2018	2018	3	97	306	
3	0855	CONC PAVER	0	100	0	0	72.00	SF	7.00	7.00	100	2018	2018	3	97	489	

LAND DESCRIPTION

TOTAL OB/XF 5,195

LN	USE CODE	CLS	LAND USE DESCRIPTION	CAP	RD	LOC ZONE	FRONT	DEPTH	TOT LND UTS	UNIT TYPE	DT	DPTH FACT	% COND	TOT ADJ	UNIT PRICE	ADJ UNIT PRICE	LAND VALUE	OTHER ADJUSTMENTS AND NOTES	YEAR	DENSITY	DECL	FRZ	YR	CONSRV
1	000100	C	SFR	100		RLM	0.00	0.00	1.00	LT		1.00	1.00	1.00	150,000.00	150,000.00	150,000							

REVIEW DATE 02/27/2024 BY KBA Total Acres: 0.00 Total Land Value: 150,000 Market: 0 Agricultural: 0 Common: 150,000 PRINTED 08/06/2024 BY SYS