LOT 48
DUNES OF AMELIA PHASE 1
PBK 8/88

MARKOVIC ROBERT E LIVING TRUST/SHENBERGER ASHLEY M
20 COUNTRY PLACE
SPRINGFIELD, IL 62703

2024

00-00-30-044D-0048-0000

NASSAU COUNTY PROPERTY

BUILDING CHARACTERISTICS

ELEMENT	CD	CONSTRUCTION
Exterior Wall	10	ABOVE AVG 100
Roof Structur	08	IRREGULAR 100
Roof Cover	03	COMP SHNGL 100
Interior Wall	05	DRYWALL 100
Interior Floo	11	CLAY TILE 60
Interior Floo	14	CARPET 40
Air Condition	03	CENTRAL 100
Heating Type	04	AIR DUCTED 100
Bedrooms		4 100
Bathrooms		3 100
Frame	02	WOOD FRAME 100
Stories	1.5	1.5 100
Units		0 100
Occupancy	00	NONE 100
Quality	06	Quality Level 06
DOR CODE	0100	SINGLE FAMILY
MAP NUM		MKT AREA 01
NEIGHBORHOOD/LOC	2121.00	

AREA TYPE	TOTAL GROSS AREA	PCT OF BASE	TOT ADJ AREA	SUBAREA MARKET VALUE
BAS	1,710	100	1,710	277,043
FGR	460	55	253	40,989
FOP	42	30	13	2,106
FSP	232	40	93	15,068
FUS	470	100	470	76,146
STR	58	10	6	972
TOTALS	2,972		2,545	412,324

MARKET ADJUSTMENTS

TYPE	MDL	EFF. AREA	TOT ADJ PTS	EFF. BASE RATE	REPL. COST NEW	AYB	EYB	ECON	FNCT		NORM	% COND
0900	01	2,545	132.2592	165.32	420,739	2018	2018	0	0	0	2.00	98.00

1 SNGL FAM – 0% - 2024 Heated Area: 2180 HX Base Yr

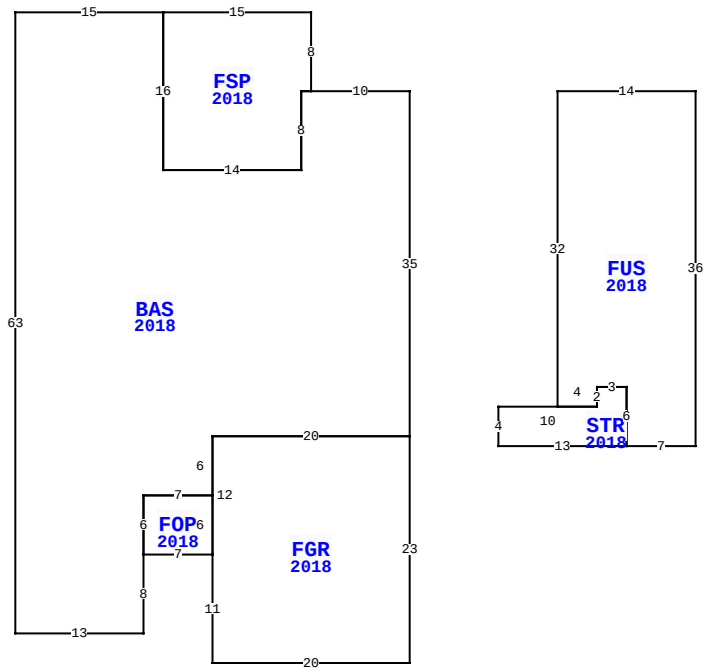

381 SARGASSO ST, FERNANDINA BEACH

BLD DATE		LGL DATE	
XF DATE		LAND DATE	03/13/2024 MLU
INC DATE		AG DATE	

VALUATION SUMMARY

VALUATION BY	STANDARD
Tax Group: 2	Tax Dist:
BUILDING MARKET VALUE	412,324
TOTAL MARKET OB/XF VALUE	4,875
TOTAL LAND VALUE - MARKET	150,000
TOTAL MARKET VALUE	567,199
SOH/AGL Deduction	0
ASSESSED VALUE	567,199
TOTAL EXEMPTION VALUE	0
BASE TAXABLE VALUE	567,199
TOTAL JUST VALUE	567,199
NCON VALUE	0
INCOME VALUE	
PREVIOUS YEAR MKT VALUE	513,648

PERMIT NUM	DESCRIPTION	AMT	ISSUED
20172314	CO ISSUED	0	02/23/2018
20172314	NEW CONSTR	274,798	07/28/2017

SALES DATA

OFF RECORD Number	DATE	TYPE INST	Q U /	V I /	RSN CD	SALE PRICE
2667/946	9/05/2023	WD	U	I	11	100
GRANTOR: SHENBERGER ASHLEY M						
GRANTEE: MARKOVIC ROBERT E L						
2301/0190	8/15/2019	QC	U	I	11	100
GRANTOR: SHENBERGER-HESS ASHLE						
GRANTEE: SHENBERGER ASHLEY M						

BUILDING NOTES

BUILDING DIMENSIONS

BAS=[YR=2018] W10 FSP=[YR=2018] N8 W15 S16 E14 N8 E1$ W1 S8 W14 N16 W15 S63 E13 N8 FOP=[YR=2018] E7 FGR=[YR=2018] S11 E20 N23 W20 S12$ N6 W7 S6$ N6 E7 N6 E20 N35$ PTR=E15 FUS=[YR=2018] E14 S36 W7 STR=[YR=2018] W13 N4 E10 N2 E3 S6$ N6 W3 S2 W4 N32$ W15$.

EXTRA FEATURES

LN	OB/XF CODE	DESCRIPTION	BLD	CAP	L	W	UNITS	UT	Adj R	ADJ UNIT PRICE	ORIG COND	YEAR ON	YEAR ACTUAL	Q	% COND	OB/XF MKT VALUE	NOTES
1	0855	CONC PAVER	0	0	0	0	652.00	SF	7.00	7.00	100	2018	2018	3	97	4,427	
2	0855	CONC PAVER	0	0	0	0	66.00	SF	7.00	7.00	100	2018	2018	3	97	448	

LAND DESCRIPTION

TOTAL OB/XF 4,875

LN	USE CODE	CLS	LAND USE DESCRIPTION	CAP	RD	LOC ZONE	FRONT	DEPTH	TOT LND UTS	UNIT TYPE	DT	DPTH FACT	% COND	TOT ADJ	UNIT PRICE	ADJ UNIT PRICE	LAND VALUE	OTHER ADJUSTMENTS AND NOTES	YEAR	DENSITY	DECL	FRZ	YR	CONSRV
1	000100	C	SFR	0		RLM	0.00	0.00	1.00	LT		1.00	1.00	1.00	150,000.00	150,000.00	150,000							

REVIEW DATE 02/27/2024 BY KBA Total Acres: 0.00 Total Land Value: 150,000 Market: 0 Agricultural: 0 Common: 150,000 PRINTED 08/06/2024 BY SYS