LOT 6
DUNES OF AMELIA PHASE 2
PBK 8/280

SERRIAN SAMUEL A & PHYLLIS A
2885 TURTLE SHORES DR
FERNANDINA BEACH, FL 32034

2024

00-00-30-044D-0006-0000

NASSAU COUNTY PROPERTY

BUILDING CHARACTERISTICS

ELEMENT	CD	CONSTRUCTION
Exterior Wall	10	ABOVE AVG 100
Roof Structur	08	IRREGULAR 100
Roof Cover	03	COMP SHNGL 100
Interior Wall	05	DRYWALL 100
Interior Floo	11	CLAY TILE 60
Interior Floo	14	CARPET 40
Air Condition	03	CENTRAL 100
Heating Type	04	AIR DUCTED 100
Bedrooms		4 100
Bathrooms		3 100
Frame	02	WOOD FRAME 100
Stories	2.	2. 100
Units		0 100
Occupancy	00	NONE 100
Quality	06	Quality Level 06
DOR CODE	0100	SINGLE FAMILY
MAP NUM		MKT AREA 01
NEIGHBORHOOD/LOC	2121.100	

AREA TYPE	TOTAL GROSS AREA	PCT OF BASE	TOT ADJ AREA	SUBAREA MARKET VALUE
BAS	1,909	100	1,909	309,284
FGR	420	55	231	37,425
FOP	48	30	14	2,268
FSP	224	40	90	14,581
FUS	388	100	388	62,861
STR	62	10	6	972
TOTALS	3,051		2,638	427,392

MARKET ADJUSTMENTS

TYPE	MDL	EFF. AREA	TOT ADJ PTS	EFF. BASE RATE	REPL. COST NEW	AYB	EYB	ECON	FNCT		NORM	% COND
0900	01	2,638	132.2592	165.32	436,114	2018	2018	0	0	0	2.00	98.00

1 SNGL FAM – 100% - 2020 Heated Area: 2297 HX Base Yr 2020

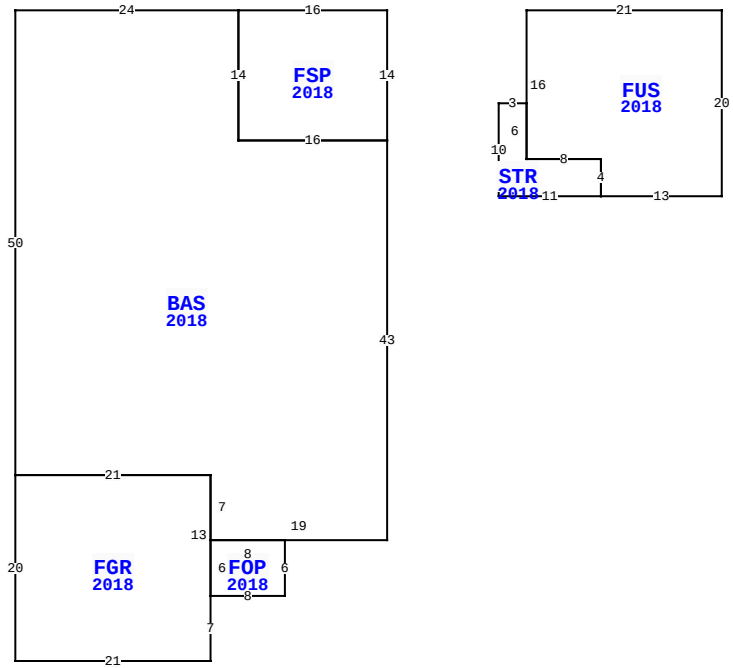

2885 TURTLE SHORES DR, FERNANDINA BEACH

BLD DATE		LGL DATE	
XF DATE		LAND DATE	03/13/2024 MLU
INC DATE		AG DATE	

VALUATION SUMMARY

VALUATION BY		STANDARD
Tax Group: 2	Tax Dist:	
BUILDING MARKET VALUE		427,392
TOTAL MARKET OB/XF VALUE		4,617
TOTAL LAND VALUE - MARKET		150,000
TOTAL MARKET VALUE		582,009
SOH/AGL Deduction		224,239
ASSESSED VALUE		357,770
TOTAL EXEMPTION VALUE	HX HB	50,000
BASE TAXABLE VALUE		307,770
TOTAL JUST VALUE		582,009
NCON VALUE		0
INCOME VALUE		
PREVIOUS YEAR MKT VALUE		524,216

PERMIT NUM	DESCRIPTION	AMT	ISSUED
20182603	CO ISSUED	0	11/28/2018
20182603	NEW CONSTR	298,306	07/26/2018

SALES DATA

OFF RECORD Number	DATE	TYPE INST	Q U	V I	RSN CD	SALE PRICE
2307/0822	9/17/2019	WD	Q	I	02	435,000
GRANTOR: KERNS DAVID N & NIKKI						
GRANTEE: SERRIAN SAMUEL A &						
2240/1942	11/29/2018	WD	Q	I	01	388,300
GRANTOR: DREAM FINDERS HOMES L						
GRANTEE: KERNS DAVID N & NIK						

BUILDING NOTES

BUILDING DIMENSIONS

BAS=[YR=2018;ORIG=-16,0] W24 S50 E21 S7 E19 N43 W16 N14 $
FGR=[YR=2018;ORIG=-40,50] S20 E21 N7 N13 W21 $
FUS=[YR=2018;ORIG=15,0] E21 S20 W13 N4 W8 N16 $
FSP=[YR=2018;ORIG=0,0] W16 S14 E16 N14 $
STR=[YR=2018;ORIG=23,20] W11 N10 E3 S6 E8 S4 $
FOP=[YR=2018;ORIG=-19,63] E8 N6 W8 S6 $
PTR=[ORIG=0,0] E15 W15 $
.

EXTRA FEATURES

L N	OB/XF CODE	DESCRIPTION	BLD	CAP	L	W	UNITS	UT	Adj R	ADJ UNIT PRICE	ORIG COND	YEAR ON	YEAR ACTUAL	Q	% COND	OB/XF MKT VALUE	NOTES
1	0855	CONC PAVER	0	100	0	0	632.00	SF	7.00	7.00	100	2018	2018	3	97	4,291	
2	0855	CONC PAVER	0	100	0	0	48.00	SF	7.00	7.00	100	2018	2018	3	97	326	

LAND DESCRIPTION

TOTAL OB/XF 4,617

L N	USE CODE	CLS	LAND USE DESCRIPTION	CAP	R D	LOC ZONE	FRONT	DEPTH	TOT LND UTS	UNIT TYPE	D T	DPTH FACT	% COND	TOT ADJ	UNIT PRICE	ADJ UNIT PRICE	LAND VALUE	OTHER ADJUSTMENTS AND NOTES	YEAR	DENSITY	DECL	FRZ	YR	CONSRV
1	000100	C	SFR	100		RLM	0.00	0.00	1.00	LT		1.00	1.00	1.00	150,000.00	150,000.00	150,000							

REVIEW DATE 02/27/2024 BY KBA Total Acres: 0.00 Total Land Value: 150,000 Market: 0 Agricultural: 0 Common: 150,000 PRINTED 08/06/2024 BY SYS