PT OF LOT 4 S-5
IN OR 2043/536
OCEAN BREEZE SUB PB 1/11

HEMMING GUST & MONICA
3113 S 14TH ST
FERNANDINA BEACH, FL 32034

2024

00-00-30-044A-0004-0050

BUILDING CHARACTERISTICS

ELEMENT	CD	CONSTRUCTION
Exterior Wall	16	WD FR STUC 100
Roof Structur	08	IRREGULAR 100
Roof Cover	03	COMP SHNGL 100
Interior Wall	05	DRYWALL 100
Interior Floo	11	CLAY TILE 50
Interior Floo	12	HARDWOOD 50
Air Condition	03	CENTRAL 100
Heating Type	04	AIR DUCTED 100
Bedrooms		3 100
Bathrooms		2.5 100
Frame	02	WOOD FRAME 100
Stories	1.	1. 100
Units		0 100
Occupancy	00	NONE 100
Quality	03	Quality Level 03

DOR CODE 0100 SINGLE FAMILY
MAP NUM | MKT AREA 02
NEIGHBORHOOD/LOC 2021.00

AREA TYPE	TOTAL GROSS AREA	PCT OF BASE	TOT ADJ AREA	SUBAREA MARKET VALUE
BAS	2,415	100	2,415	321,411
FGR	712	55	392	52,171
FOP	75	30	22	2,928
FSP	228	40	91	12,111
FUS	759	100	759	101,015
FUS	920	100	920	122,442
PTO	64	5	3	399
PTO	184	5	9	1,198
TOTALS	5,357		4,611	613,675

MARKET ADJUSTMENTS

TYPE	MDL	EFF. AREA	TOT ADJ PTS	EFF. BASE RATE	REPL. COST NEW	AYB	EYB	ECON	FNCT		NORM	% COND
0500	01	4,611	98.0400	147.06	678,094	2004	2004	0	0	0	9.50	90.50

1 SFR CUST – 100% - 2021 Heated Area: 4094 HX Base Yr

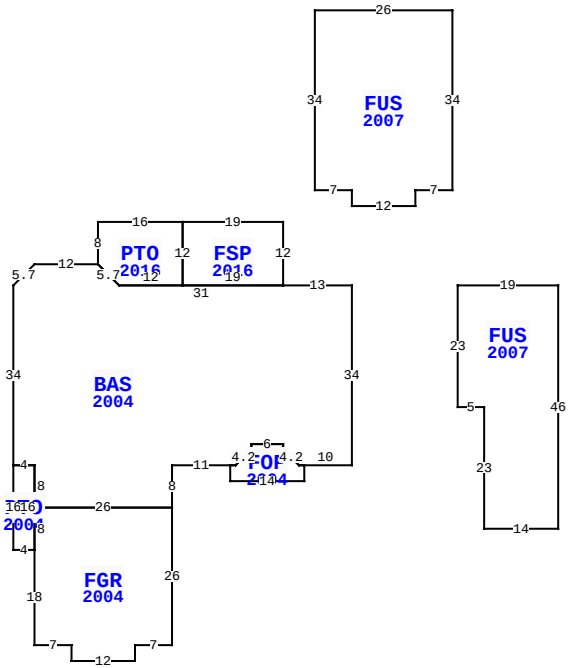

3113 S 14TH ST, FERNANDINA BEACH

BLD DATE		LGL DATE	
XF DATE		LAND DATE	03/12/2024 MLU
INC DATE		AG DATE	

NASSAU COUNTY PROPERTY

PAGE 1 of 1 8

VALUATION SUMMARY

VALUATION BY		STANDARD
Tax Group: 8	Tax Dist:	
BUILDING MARKET VALUE		613,675
TOTAL MARKET OB/XF VALUE		77,448
TOTAL LAND VALUE - MARKET		200,000
TOTAL MARKET VALUE		891,123
SOH/AGL Deduction		123,666
ASSESSED VALUE		767,457
TOTAL EXEMPTION VALUE	13	767,457
BASE TAXABLE VALUE		0
TOTAL JUST VALUE		891,123
NCON VALUE		0
INCOME VALUE		
PREVIOUS YEAR MKT VALUE		745,104

PERMIT NUM	DESCRIPTION	AMT	ISSUED
20002424	SWIM POOL	32,250	03/18/2020
E1631677	REMODEL	0	07/01/2016
R035263	REPAIR/RRF	2,500	07/01/2003
B0363752	NEW CONSTR	187,027	05/01/2003

SALES DATA

OFF RECORD Number	DATE	TYPE INST	Q / U	V / I	RSN CD	SALE PRICE
2043/0536	3/30/2016	SW	U	I	12	242,900
GRANTOR: CARRINGTON MORTGAGE L						
GRANTEE: HEMMING GUST & MONI						
1979/0345	5/12/2015	CT	U	I	18	100
GRANTOR: CLERK OF COURT						
GRANTEE: CARRINGTON MORTGAGE						

BUILDING NOTES

BUILDING DIMENSIONS

BAS=[YR=2004] W13 FSP=[YR=2016] N12 W19 PTO=[YR=2016] W16 S8 D4 R4 E12 N12$ S12 E19$ W31 U4 L4 W12 D4 L4 S34 PTO=[YR=2004] S16 E4 FGR=[YR=2004] S18 E7 S3 E12 N3 E7 N26 W26 S8$ N16 W4$ E4 S8 E26 N8 E11 FOP=[YR=2004] S3 E14 N3 W1 U3 L3 N1 W6 S1 D3 L3 W1$ E1 U3 R3 N1 E6 S1 D3 R3 E10 N34$ PTR= N15 FUS=[YR=2007] N3 W7 N34 E26 S34 W7 S3 W12$ S15$ PTR=E20 FUS=[YR=2007] E19 S46 W14 N23 W5 N23$ W20$.

EXTRA FEATURES

LN	OB/XF CODE	DESCRIPTION	BLD	CAP	L	W	UNITS	UT	Adj R	ADJ UNIT PRICE	ORIG COND	YEAR ON	YEAR ACTUAL	Q	% COND	OB/XF MKT VALUE	NOTES
1	0810	CONCRETE A	0	100	12	16	192.00	SF	6.50	6.50	100	2004	2004	3	84	1,048	
2	0811	CONCRETE B	0	100	0	0	763.00	SF	5.20	5.20	100	2006	2006	3	87	3,452	
3	0812	CONCRETE C	0	100	0	0	1,899.00	SF	4.00	4.00	100	2016	2016	3	96	7,292	
4	0504	FP-ELECTRI	0	100	0	0	1.00	UT	2,000.00	2,000.00	100	2016	2016	3	97	1,940	
5	0861	POOL GUNIT	0	100	0	0	610.00	SF	85.00	85.00	100	2020	2020	3	93	48,221	
6	0855	CONC PAVER	0	100	0	0	788.00	SF	10.00	10.00	100	2020	2020	3	99	7,801	
7	0940	SHEDS/PORT	0	100	10	16	160.00	SF	30.00	30.00	100	2020	2020	3	90	4,320	
8	1242	WD DECK A	0	100	10	16	160.00	SF	10.00	10.00	100	2020	2020	3	90	1,440	
9	0680	POLE SHED	0	100	10	20	200.00	SF	5.00	5.00	100	2020	2020	3	93	930	
10	1076	TRELLIS A	0	100	12	12	144.00	SF	7.50	7.50	100	2020	2020	3	93	1,004	

TOTAL OB/XF 77,448

LAND DESCRIPTION

LN	USE CODE	CLS	LAND USE DESCRIPTION	CAP	RD	LOC ZONE	FRONT	DEPTH	TOT LND UTS	UNIT TYPE	DT	DPTH FACT	% COND	TOT ADJ	UNIT PRICE	ADJ UNIT PRICE	LAND VALUE	OTHER ADJUSTMENTS AND NOTES	YEAR	DENSITY	DECL	FRZ	YR	CONSRV
1	000100	C	SFR	100		RSF-2	0.00	0.00	1.00	LT		1.00	1.00	1.00	200,000.00	200,000.00	200,000							

REVIEW DATE 01/14/2021 BY TWA Total Acres: 0.00 Total Land Value: 200,000 Market: 0 Agricultural: 0 Common: 200,000 PRINTED 08/06/2024 BY SYS