LOT 1
IN OR 2013/1523
OCEAN BLVD EST #1 PB 6/279

PRICE AB PROPERTY HOLDINGS LLC
2394 ST JOHNS BLUFF RD S #200
JACKSONVILLE, FL 32246

2024

00-00-30-0438-0001-0000

BUILDING CHARACTERISTICS

ELEMENT	CD	CONSTRUCTION
Exterior Wall	17	CB STUCCO 100
Roof Structur	08	IRREGULAR 100
Roof Cover	03	COMP SHNGL 100
Interior Wall	05	DRYWALL 100
Interior Floo	11	CLAY TILE 100
Air Condition	03	CENTRAL 100
Heating Type	04	AIR DUCTED 100
Bedrooms		3 100
Bathrooms		3.5 100
Frame	02	WOOD FRAME 100
Stories	3.	3. 100
Units		0 100
Occupancy	00	NONE 100
Quality	05	Quality Level 05
DOR CODE	0100	SINGLE FAMILY
MAP NUM		MKT AREA 03
NEIGHBORHOOD/LOC	3037.00	

AREA TYPE	TOTAL GROSS AREA	PCT OF BASE	TOT ADJ AREA	SUBAREA MARKET VALUE
BAS	513	100	513	96,037
FGR	483	55	266	49,797
FOP	160	30	48	8,986
FOP	40	30	12	2,246
FOP	63	30	19	3,557
FOP	80	30	24	4,493
FOP	100	30	30	5,616
FST	35	55	19	3,557
FUS	1,055	100	1,055	197,503
FUS	1,185	100	1,185	221,840
TOTALS	3,954		3,219	602,620

MARKET ADJUSTMENTS

TYPE	MDL	EFF. AREA	TOT ADJ PTS	EFF. BASE RATE	REPL. COST NEW	AYB	EYB	ECON	FNCT		NORM	% COND
0320	12	3,219	220.1744	209.17	673,318	2002	2002	0	0	0	10.50	89.50

1 TOWNHOUSE – 0% - 0 Heated Area: 2753 HX Base Yr

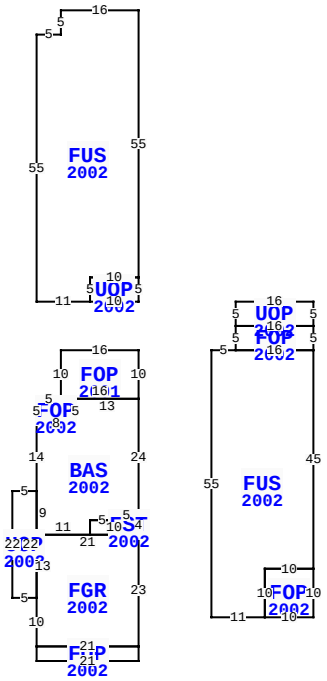

** This building has 13 Sub-Areas

95570 BURNEY RD, FERNANDINA BEACH

BLD DATE		LGL DATE	
XF DATE		LAND DATE	
INC DATE		AG DATE	

NASSAU COUNTY PROPERTY

PAGE 1 of 1 8

VALUATION SUMMARY

VALUATION BY	STANDARD
Tax Group: 8	Tax Dist:
BUILDING MARKET VALUE	602,620
TOTAL MARKET OB/XF VALUE	16,292
TOTAL LAND VALUE - MARKET	187,200
TOTAL MARKET VALUE	806,112
SOH/AGL Deduction	218,280
ASSESSED VALUE	587,832
TOTAL EXEMPTION VALUE	0
BASE TAXABLE VALUE	587,832
TOTAL JUST VALUE	806,112
NCON VALUE	0
INCOME VALUE	
PREVIOUS YEAR MKT VALUE	773,712

PERMIT NUM	DESCRIPTION	AMT	ISSUED
B24876	REPAIR/RRF	30,000	07/01/2011

SALES DATA

OFF RECORD Number	DATE	TYPE INST	Q / U	V / I	RSN CD	SALE PRICE
2013/1523	8/24/2015	QC	U	I	11	100
GRANTOR: YODER AMBER 1/2 INT &						
GRANTEE: PRICE AB PROPERTY H						
2013/1520	3/15/2015	QC	U	I	11	100
GRANTOR: PRICE WILLIAM R TRUST						
GRANTEE: YODER AMBER 1/2 INT						

BUILDING NOTES

BUILDING DIMENSIONS

FOP=[YR=2001] W16 S10 FOP=[YR=2002] W5 S5 BAS=[YR=2002] S14 UOP=[YR=2002] W5 S22 E5 FGR=[YR=2002] S10 FOP=[YR=2002] S3 E21 N3 W21 $ E21 N23 FST=[YR=2002] N4 W5 S1 W5 S3 E10 $ W21 S13 $ N22 $ S9 E11 N3 E5 N1 E5 N24 W13 S5 W8 $ E8 N5 W3 $ E16 N10 $ PTR= E15 FUS=[YR=2002] E5 FOP=[YR=2002] N5 UOP=[YR=2002] N5 E16 S5 W16 $ E16 S5 W16 $ E16 S45 FOP=[YR=2002] S10 W10 N10 E10 $ W10 S10 W11 N55 $ W15 $ PTR= N10 UOP=[YR=2002] N5 FUS=[YR=2002] N55 W16 S5 W5 S55 E11 N5 E10 $ W10 S5 E10 $ S10 $.

EXTRA FEATURES

L N	OB/XF CODE	DESCRIPTION	BLD	CAP	L	W	UNITS	UT	Adj R	ADJ UNIT PRICE	ORIG COND	YEAR ON	YEAR ACTUAL	Q	% COND	OB/XF MKT VALUE	NOTES
1	0504	FP-ELECTRI	0	0	0	0	1.00	UT	2,000.00	2,000.00	100	2002	2002	3	86	1,720	
2	0812	CONCRETE C	0	0	0	0	1,439.00	SF	4.00	4.00	100	2002	2002	3	82	4,720	
3	0811	CONCRETE B	0	0	0	0	934.00	SF	5.20	5.20	100	2002	2002	3	82	3,983	
4	1126	CB/STC 8"	0	0	0	0	789.00	SF	8.00	8.00	100	2002	2002	3	82	5,176	
5	1075	TRELLIS G	0	0	11	6	66.00	SF	35.00	35.00	100	2002	2002	3	30	693	

LAND DESCRIPTION

TOTAL OB/XF 16,292

L N	USE CODE	CLS	LAND USE DESCRIPTION	CAP	R D	LOC ZONE	FRONT	DEPTH	TOT LND UTS	UNIT TYPE	D T	DPTH FACT	% COND	TOT ADJ	UNIT PRICE	ADJ UNIT PRICE	LAND VALUE	OTHER ADJUSTMENTS AND NOTES	YEAR	DENSITY	DECL	FRZ	YR	CONSRV
1	000100	C	SFR	0		RG-1	36.00	130.00	36.00	FF		1.00	1.00	1.00	5,200.00	5,200.00	187,200							

REVIEW DATE 05/12/2019 BY KBA Total Acres: 0.00 Total Land Value: 187,200 Market: 0 Agricultural: 0 Common: 187,200 PRINTED 08/06/2024 BY SYS