PT OF LOT 1 OF LANDS OF EMIL O
FRIEND S/D OF SEC 31-3N-28E
DBK Z/165 & PT OF GOVT LOT 3

STURGES WALTER E & SUSAN D
603 BONNIEVIEW RD
FERNANDINA BEACH, FL 32034

2024

00-00-30-034B-0001-0020

NASSAU COUNTY PROPERTY

BUILDING CHARACTERISTICS

ELEMENT	CD	CONSTRUCTION
Exterior Wall	05	AVERAGE 70
Exterior Wall	20	FACE BRICK 30
Roof Structur	03	GABLE/HIP 100
Roof Cover	03	COMP SHNGL 100
Interior Wall	05	DRYWALL 100
Interior Floo	14	CARPET 80
Interior Floo	08	SHT VINYL 20
Air Condition	03	CENTRAL 100
Heating Type	04	AIR DUCTED 100
Bedrooms		3 100
Bathrooms		2 100
Frame	02	WOOD FRAME 100
Stories	2.	2. 100
Units		0 100
Occupancy	00	NONE 100
Quality	03	Quality Level 03
DOR CODE	0100	SINGLE FAMILY
MAP NUM		MKT AREA 02
NEIGHBORHOOD/LOC	2020.00	

AREA TYPE	TOTAL GROSS AREA	PCT OF BASE	TOT ADJ AREA	SUBAREA MARKET VALUE
BAS	1,998	100	1,998	210,009
FGR	504	55	277	29,116
FOP	8	30	2	210
FOP	104	30	31	3,258
FSP	157	40	63	6,622
FST	18	55	10	1,051
FUS	200	100	200	21,022
TOTALS	2,989		2,581	271,288

MARKET ADJUSTMENTS

TYPE	MDL	EFF. AREA	TOT ADJ PTS	EFF. BASE RATE	REPL. COST NEW	AYB	EYB	ECON	FNCT		NORM	% COND
0900	01	2,581	100.7040	125.88	324,896	1994	1994	0	0	0	16.50	83.50

1 SNGL FAM – 100% - 1995 Heated Area: 2198 HX Base Yr 1995

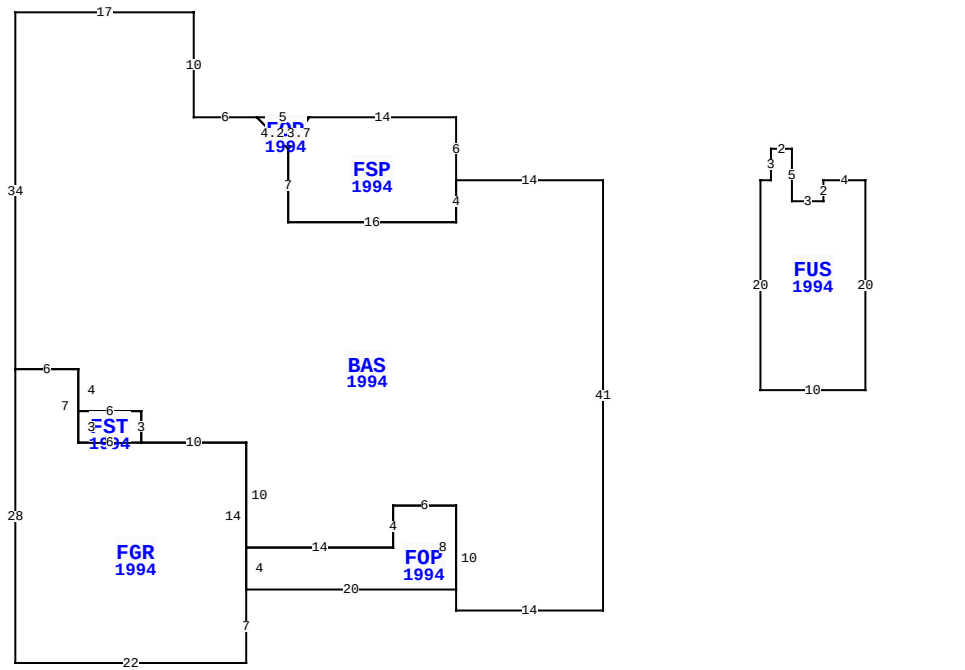

603 BONNIEVIEW RD, FERNANDINA BEACH

BLD DATE		LGL DATE	
XF DATE		LAND DATE	
INC DATE		AG DATE	

VALUATION SUMMARY

VALUATION BY		STANDARD
Tax Group: 8	Tax Dist:	
BUILDING MARKET VALUE		271,288
TOTAL MARKET OB/XF VALUE		18,173
TOTAL LAND VALUE - MARKET		367,525
TOTAL MARKET VALUE		656,986
SOH/AGL Deduction		421,707
ASSESSED VALUE		235,279
TOTAL EXEMPTION VALUE	HX HB	50,000
BASE TAXABLE VALUE		185,279
TOTAL JUST VALUE		656,986
NCON VALUE		0
INCOME VALUE		
PREVIOUS YEAR MKT VALUE		645,784

PERMIT NUM	DESCRIPTION	AMT	ISSUED
B9603062	XFOB	10,200	07/01/1996
B00879	NEW CONSTR	89,313	03/01/1994

SALES DATA

OFF RECORD Number	DATE	TYPE INST	Q U	V I	RSN CD	SALE PRICE
1158/0893	6/30/2003	WD	U	I	16	100
GRANTOR: BROOKS WINDLE G & ELS						
GRANTEE: STURGES WALTER E &						
0833/0744	5/06/1998	WD	U	I	01	100
GRANTOR: BROOKS WINDLE G IV &						
GRANTEE: STURGES WALTER E &						

BUILDING NOTES

BUILDING DIMENSIONS

BAS=[YR=1994] W14 FSP=[YR=1994] N6 W14 FOP=[YR=1994] W5 D3 R3 U3 R2 $ D3 L2 S7 E16 N4$ S4 W16 N7 U3 L3 W6N10W17 S34 FGR=[YR=1994] S28 E22N7 FOP=[YR=1994] E20 N8 W6 S4 W14 S4$ N14 W10 FST=[YR=1994] N3 W6 S3 E6$W6 N7 W6$ E6 S4 E6 S3 E10 S10 E14 N4 E6 S10 E14 N41$ PTR=E15FUS=[YR=1994] E1 N3 E2 S5 E3 N2 E4 S20 W10 N20$ W15$.

EXTRA FEATURES

LN	OB/XF CODE	DESCRIPTION	BLD	CAP	L	W	UNITS	UT	Adj R	ADJ UNIT PRICE	ORIG COND	YEAR ON	YEAR ACTUAL	Q	% COND	OB/XF MKT VALUE	NOTES
1	0504	FP-ELECTRI	0	100	0	0	1.00	UT	2,000.00	2,000.00	100	1994	1994	3	76	1,520	
2	0810	CONCRETE A	0	100	0	0	1,888.00	SF	6.50	6.50	100	1994	1994	3	68	8,345	
3	0810	CONCRETE A	0	100	65	3	195.00	SF	6.50	6.50	100	1994	1994	3	68	862	
4	0825	BRICK	0	100	6	1	6.00	SF	12.50	12.50	100	1994	1994	3	90	68	
5	0810	CONCRETE A	0	100	20	20	400.00	SF	6.50	6.50	100	1995	1995	3	70	1,820	
6	0510	GARAGE WD-	0	100	30	20	600.00	SF	35.00	35.00	100	1996	1996	3	24	5,040	
7	0810	CONCRETE A	0	100	0	0	44.00	SF	6.50	6.50	100	1996	1996	3	72	206	
8	1242	WD DECK A	0	100	13	10	130.00	SF	10.00	10.00	100	2005	2005	3	24	312	

LAND DESCRIPTION

TOTAL OB/XF 18,173

LN	USE CODE	CLS	LAND USE DESCRIPTION	CAP	RD	LOC ZONE	FRONT	DEPTH	TOT LND UTS	UNIT TYPE	DT	DPTH FACT	% COND	TOT ADJ	UNIT PRICE	ADJ UNIT PRICE	LAND VALUE	OTHER ADJUSTMENTS AND NOTES	YEAR	DENSITY	DECL	FRZ	YR	CONSRV
1	000116	C	SFR MARSH	100		RSF-2	178.00	250.00	1.00	AC		1.00	1.00	1.00	250,000.00	250,000.00	250,000							
2	000116	C	SFR MARSH	100		RSF-2	0.00	0.00	0.47	AC		1.00	1.00	1.00	250,000.00	250,000.00	117,500							
3	000116	C	SFR MARSH	100		RSF-2	0.00	0.00	1.00	UT		1.00	1.00	1.00	25.00	25.00	25							

REVIEW DATE 05/12/2019 BY KBA Total Acres: 1.47 Total Land Value: 367,525 Market: 0 Agricultural: 0 Common: 367,525 PRINTED 08/06/2024 BY SYS