LOT 24
ISLAND BLUFF SUB PB 5/92

PITTMAN SAMUEL H & CHERYL M L/E/
1709 BLUE HERON LANE
FERNANDINA BEACH, FL 32034

2024

00-00-30-031B-0024-0000

BUILDING CHARACTERISTICS

ELEMENT	CD	CONSTRUCTION
Exterior Wall	10	ABOVE AVG 100
Roof Structur	03	GABLE/HIP 100
Roof Cover	03	COMP SHNGL 100
Interior Wall	05	DRYWALL 100
Interior Floo	14	CARPET 80
Interior Floo	08	SHT VINYL 20
Air Condition	03	CENTRAL 100
Heating Type	04	AIR DUCTED 100
Bedrooms		3 100
Bathrooms		2.5 100
Frame	02	WOOD FRAME 100
Stories	2.	2. 100
Units		0 100
BUD8 Adjustme	05	DIST 1A 100
Occupancy	00	NONE 100
Quality	06	Quality Level 06
DOR CODE	0100	SINGLE FAMILY
MAP NUM		MKT AREA 02
NEIGHBORHOOD/LOC	2009.00	

AREA TYPE	TOTAL GROSS AREA	PCT OF BASE	TOT ADJ AREA	SUBAREA MARKET VALUE
BAS	692	100	692	91,165
FEP	220	80	176	23,186
FGR	312	55	172	22,660
FOP	108	30	32	4,216
FUS	884	100	884	116,460
TOTALS	2,216		1,956	257,687

MARKET ADJUSTMENTS

TYPE	MDL	EFF. AREA	TOT ADJ PTS	EFF. BASE RATE	REPL. COST NEW	AYB	EYB	ECON	FNCT		NORM	% COND
0900	01	1,956	125.0970	156.37	305,860	1988	1988	0	0	0	15.75	84.25

1 SNGL FAM – 100% - 1989 Heated Area: 1576 HX Base Yr 1989

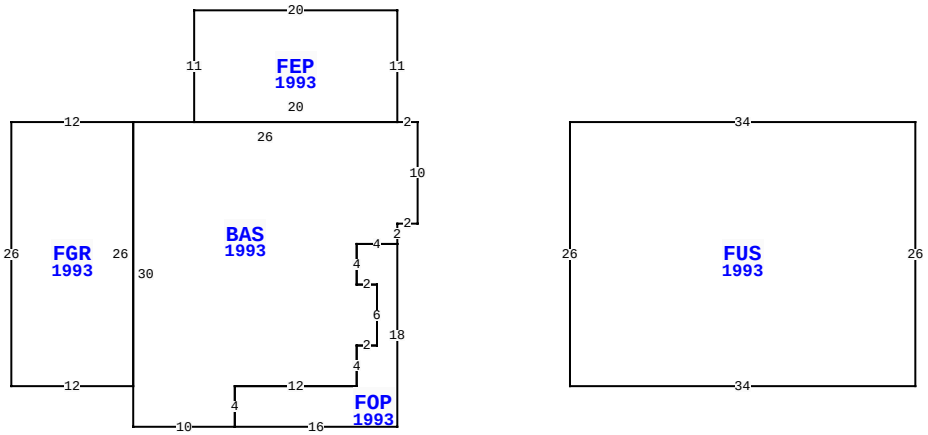

1709 BLUE HERON LN, FERNANDINA BEACH

BLD DATE		LGL DATE	
XF DATE		LAND DATE	04/03/2024 MLU
INC DATE		AG DATE	

NASSAU COUNTY PROPERTY

PAGE 1 of 2 8

VALUATION SUMMARY

VALUATION BY		STANDARD
Tax Group: 8	Tax Dist:	
BUILDING MARKET VALUE		270,359
TOTAL MARKET OB/XF VALUE		1,678
TOTAL LAND VALUE - MARKET		150,000
TOTAL MARKET VALUE		422,037
SOH/AGL Deduction		272,102
ASSESSED VALUE		149,935
TOTAL EXEMPTION VALUE	HX HB	50,000
BASE TAXABLE VALUE		99,935
TOTAL JUST VALUE		422,037
NCON VALUE		0
INCOME VALUE		
PREVIOUS YEAR MKT VALUE		370,334

PERMIT NUM	DESCRIPTION	AMT	ISSUED
E01-8557	XFOB	0	09/01/2001
B0007750	XFOB	15,000	09/01/2000
7928	REMODEL	3,500	03/12/1992
4680	NEW CONSTR	52,159	02/23/1988

SALES DATA

OFF RECORD Number	DATE	TYPE INST	Q / U	V / I	RSN CD	SALE PRICE
2728/910	7/24/2024	LE	U	I	11	100
GRANTOR: PITTMAN SAMUEL H & CH						
GRANTEE: COLWELL MARCI PITTM						
0544/0422	5/31/1988	WD	Q	I		81,300
GRANTOR: FOSS ALLAN & JANICE						
GRANTEE: PITTMAN SAMUEL & C						

BUILDING NOTES

BUILDING DIMENSIONS

BAS=[YR=1993] W2 FEP=[YR=1993] N11 W20 S11 E20 $ W26 FGR=[YR=1993] W12 S26 E12 N26 $ S30 E10 FOP=[YR=1993] E16 N18 W4 S4 E2 S6 W2 S4 W12 S4 $ N4 E12 N4 E2 N6 W2 N4 E4 N2 E2 N10 $ PTR= E15 FUS=[YR=1993] E34 S26 W34 N26 $ W15 $.

EXTRA FEATURES

LN	OB/XF CODE	DESCRIPTION	BLD	CAP	L	W	UNITS	UT	Adj R	ADJ UNIT PRICE	ORIG COND	YEAR ON	YEAR ACTUAL	Q	% COND	OB/XF MKT VALUE	NOTES
1	0810	CONCRETE A	0	100	17	3	51.00	SF	6.50	6.50	100	1988	1988	3	54.5	181	
2	0810	CONCRETE A	0	100	13	19	247.00	SF	6.50	6.50	100	1988	1988	3	54.5	875	
3	1242	WD DECK A	0	100	15	16	240.00	SF	10.00	10.00	100	1988	1988	3	20	480	
4	0810	CONCRETE A	0	100	10	4	40.00	SF	6.50	6.50	100	1988	1988	3	54.5	142	

LAND DESCRIPTION

TOTAL OB/XF 1,678

LN	USE CODE	CLS	LAND USE DESCRIPTION	CAP	RD	LOC ZONE	FRONT	DEPTH	TOT LND UTS	UNIT TYPE	DT	DPTH FACT	% COND	TOT ADJ	UNIT PRICE	ADJ UNIT PRICE	LAND VALUE	OTHER ADJUSTMENTS AND NOTES	YEAR	DENSITY	DECL	FRZ	YR	CONSRV
1	000100	C	SFR	100		RSF-2	0.00	0.00	1.00	LT		1.00	1.00	1.00	150,000.00	150,000.00	150,000							

REVIEW DATE 01/31/2024 BY KBA Total Acres: 0.00 Total Land Value: 150,000 Market: 0 Agricultural: 0 Common: 150,000 PRINTED 08/06/2024 BY SYS

LOT 24
ISLAND BLUFF SUB PB 5/92

PITTMAN SAMUEL H & CHERYL M L/E/
1709 BLUE HERON LANE
FERNANDINA BEACH, FL 32034

2024

00-00-30-031B-0024-0000

NASSAU COUNTY PROPERTY

BUILDING CHARACTERISTICS

ELEMENT	CD	CONSTRUCTION
Exterior Wall	05	AVERAGE 100
Roof Structur	03	GABLE/HIP 100
Roof Cover	03	COMP SHNGL 100
Interior Wall	05	DRYWALL 100
Interior Floo	08	SHT VINYL 100
Air Condition	02	WINDOW 100
Heating Type	01	NONE 100
Bedrooms		0 100
Bathrooms		0 100
Frame	03	MASONRY 100
Stories	0	0 100
Units		0 100
Occupancy	00	NONE 100
Quality	03	Quality Level 03

DOR CODE	0100	SINGLE FAMILY	
MAP NUM		MKT AREA	02
NEIGHBORHOOD/LOC	2009.00		

AREA TYPE	TOTAL GROSS AREA	PCT OF BASE	TOT ADJ AREA	SUBAREA MARKET VALUE
BAS	600	100	600	12,225
DCK	224	10	22	448
TOTALS	824		622	12,672

MARKET ADJUSTMENTS

TYPE	MDL	EFF. AREA	TOT ADJ PTS	EFF. BASE RATE	REPL. COST NEW	AYB	EYB	ECON	FNCT		NORM	% COND
6500	01	622	92.4000	32.34	20,115	2000	2000	0	0	0	37.00	63.00

2 GARAGE RES – 100% - 1989 Heated Area: 600 HX Base Yr 1989

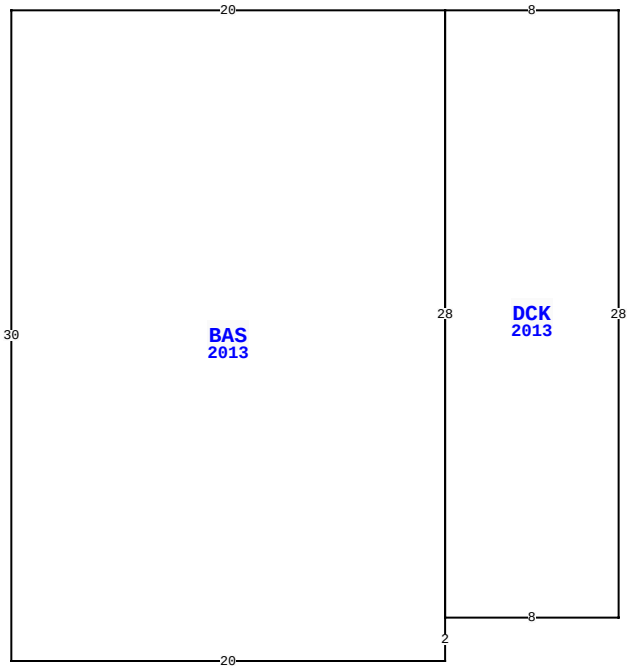

1709 BLUE HERON LN, FERNANDINA BEACH

BLD DATE		LGL DATE	
XF DATE		LAND DATE	04/03/2024 MLU
INC DATE		AG DATE	

VALUATION SUMMARY

VALUATION BY		STANDARD
Tax Group: 8	Tax Dist:	
BUILDING MARKET VALUE		270,359
TOTAL MARKET OB/XF VALUE		1,678
TOTAL LAND VALUE - MARKET		150,000
TOTAL MARKET VALUE		422,037
SOH/AGL Deduction		272,102
ASSESSED VALUE		149,935
TOTAL EXEMPTION VALUE	HX HB	50,000
BASE TAXABLE VALUE		99,935
TOTAL JUST VALUE		422,037
NCON VALUE		0
INCOME VALUE		
PREVIOUS YEAR MKT VALUE		370,334

PERMIT NUM	DESCRIPTION	AMT	ISSUED

SALES DATA

OFF RECORD Number	DATE	TYPE INST	Q / U	V / I	RSN CD	SALE PRICE
2728/910	7/24/2024	LE	U	I	11	100
GRANTOR: PITTMAN SAMUEL H & CH						
GRANTEE: COLWELL MARCI PITTM						
0544/0422	5/31/1988	WD	Q	I		81,300
GRANTOR: FOSS ALLAN & JANICE						
GRANTEE: PITTMAN SAMUEL & C						

BUILDING NOTES

BUILDING DIMENSIONS

BAS=[YR=2013] W20 S30 E20 N2 DCK=[YR=2013] E8 N28 W8 S28$ N28$.

EXTRA FEATURES

L N	OB/XF CODE	DESCRIPTION	BLD	CAP	L	W	UNITS	UT	Adj R	ADJ UNIT PRICE	ORIG COND	YEAR ON	YEAR ACTUAL	Q	% COND	OB/XF MKT VALUE	NOTES

LAND DESCRIPTION

TOTAL OB/XF 0

L N	USE CODE	CLS	LAND USE DESCRIPTION	CAP	R D	LOC ZONE	FRONT	DEPTH	TOT LND UTS	UNIT TYPE	D T	DPTH FACT	% COND	TOT ADJ	UNIT PRICE	ADJ UNIT PRICE	LAND VALUE	OTHER ADJUSTMENTS AND NOTES	YEAR	DENSITY	DECL	FRZ	YR	CONSRV

REVIEW DATE 01/31/2024 BY KBA Total Acres: 0.00 Total Land Value: 150,000 Market: 0 Agricultural: 0 Common: 150,000 PRINTED 08/06/2024 BY SYS