LOT 17
IN OR 2194/627
HARRISON COVE PB 6/197

LASCELL MATTHEW & LORI A
95147 MACKINAS CIR
FERNANDINA BEACH, FL 32034

2024

00-00-30-0283-0017-0000

NASSAU COUNTY PROPERTY

BUILDING CHARACTERISTICS

ELEMENT	CD	CONSTRUCTION
Exterior Wall	10	ABOVE AVG 100
Roof Structur	03	GABLE/HIP 100
Roof Cover	03	COMP SHNGL 100
Interior Wall	05	DRYWALL 100
Interior Floo	12	HARDWOOD 70
Interior Floo	14	CARPET 30
Air Condition	03	CENTRAL 100
Heating Type	04	AIR DUCTED 100
Bedrooms		4 100
Bathrooms		3 100
Frame	02	WOOD FRAME 100
Stories	1.	1. 100
Units		0 100
Occupancy	00	NONE 100
Quality	04	Quality Level 04
DOR CODE	0100	SINGLE FAMILY
MAP NUM		MKT AREA 03
NEIGHBORHOOD/LOC	3034.00	

AREA TYPE	TOTAL GROSS AREA	PCT OF BASE	TOT ADJ AREA	SUBAREA MARKET VALUE
BAS	241	100	241	35,357
BAS	247	100	247	36,237
BAS	2,210	100	2,210	324,227
FGR	478	55	263	38,585
FOP	33	30	10	1,467
FOP	36	30	11	1,614
FOP	60	30	18	2,641
FSP	395	40	158	23,180
TOTALS	3,700		3,158	463,307

MARKET ADJUSTMENTS

TYPE	MDL	EFF. AREA	TOT ADJ PTS	EFF. BASE RATE	REPL. COST NEW	AYB	EYB	ECON	FNCT		NORM	% COND
0500	01	3,158	108.6750	163.01	514,786	2002	2002	0	0	0	10.00	90.00

1 SFR CUST – 100% - 2019 Heated Area: 2698 HX Base Yr 2019

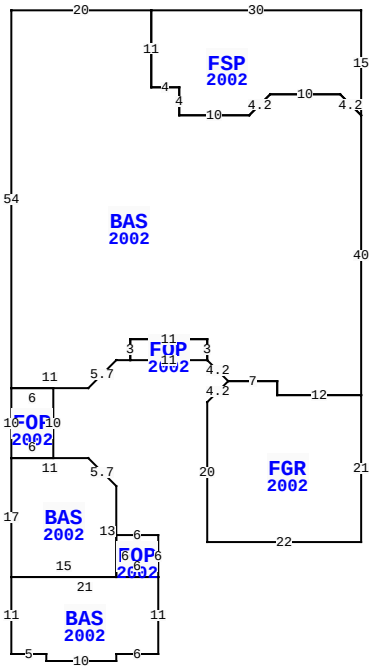

95147 MACKINAS CIR, FERNANDINA BEACH

BLD DATE		LGL DATE	
XF DATE		LAND DATE	
INC DATE		AG DATE	

VALUATION SUMMARY

VALUATION BY		STANDARD
Tax Group: 8	Tax Dist:	
BUILDING MARKET VALUE		463,307
TOTAL MARKET OB/XF VALUE		83,469
TOTAL LAND VALUE - MARKET		350,000
TOTAL MARKET VALUE		896,776
SOH/AGL Deduction		335,596
ASSESSED VALUE		561,180
TOTAL EXEMPTION VALUE	HX HB	50,000
BASE TAXABLE VALUE		511,180
TOTAL JUST VALUE		896,776
NCON VALUE		81,471
INCOME VALUE		
PREVIOUS YEAR MKT VALUE		794,984

PERMIT NUM	DESCRIPTION	AMT	ISSUED
B230011735	0911-1218	10,962	09/14/2023
B230009543	861-471 855-687 8	115,000	07/26/2023
B0108789	NEW CONSTR	300,000	09/01/2001

SALES DATA

OFF RECORD Number	DATE	TYPE INST	Q U	V I	RSN CD	SALE PRICE
2194/0627	5/04/2018	WD	Q	I	02	543,000
GRANTOR: HOULE WALTER D & CARO						
GRANTEE: LASCELL MATTHEW & L						
1051/0329	4/22/2002	WD	Q	I		316,100
GRANTOR: COPPENBARGER HOMES IN						
GRANTEE: HOULE WALTER D & CA						

EXTRA FEATURES

LN	OB/XF CODE	DESCRIPTION	BLD	CAP	L	W	UNITS	UT	Adj R	ADJ UNIT PRICE	ORIG COND	YEAR ON	YEAR ACTUAL	Q	% COND	OB/XF MKT VALUE	NOTES
1	0811	CONCRETE B	0	100	0	0	904.00	SF	5.20	5.20	100	2002	2002	3	82	3,855	
2	0810	CONCRETE A	0	100	0	0	240.00	SF	6.50	6.50	100	2002	2002	3	82	1,279	
3	0825	BRICK	0	100	0	0	184.00	SF	12.50	12.50	100	2002	2002	3	95	2,185	
4	0504	FP-ELECTRI	0	100	0	0	1.00	UT	2,000.00	2,000.00	100	2002	2002	3	86	1,720	
5	0861	POOL GUNIT	0	100	0	0	426.00	SF	85.00	85.00	100	2024	2023		100	36,210	
6	0911	SCRN RM A	0	100	42	30	1,260.00	SF	17.50	17.50	100	2024	2023		100	22,050	
7	0855	CONC PAVER	0	100	0	0	1,417.00	SF	10.00	10.00	100	2024	2023		100	14,170	
8	0871	POOL HTR R	0	100	0	0	1.00	UT	2,000.00	2,000.00	100	2024	2023		100	2,000	

BUILDING NOTES

BUILDING DIMENSIONS

BAS=[YR=2002;ORIG=-30,0] W20 S54 E11 U4R4 E2 N3 E11 S3 D3R3 E7 S2 E12 N40 U3L3 W10 D3L3 W10 N4 W4 N11 $
FGR=[YR=2002;ORIG=-19,53] D3L3 S20 E22 N21 W12 N2 W7 $
FSP=[YR=2002;ORIG=0,0] W30 S11 E4 S4 E10 U3R3 E10 D3R3 N15 $
BAS=[YR=2002;ORIG=-50,64] S17 E15 N13 U4L4 W11 $
BAS=[YR=2002;ORIG=-50,81] S11 E5 S1 E10 N1 E6 N11 W21 $
FOP=[YR=2002;ORIG=-50,54] S10 E6 N10 W6 $
FOP=[YR=2002;ORIG=-29,81] N6 W6 S6 E6 $
FOP=[YR=2002;ORIG=-33,50] E11 N3 W11 S3 $
.

LAND DESCRIPTION

TOTAL OB/XF 83,469

LN	USE CODE	CLS	LAND USE DESCRIPTION	CAP	RD	LOC ZONE	FRONT	DEPTH	TOT LND UTS	UNIT TYPE	DT	DPTH FACT	% COND	TOT ADJ	UNIT PRICE	ADJ UNIT PRICE	LAND VALUE	OTHER ADJUSTMENTS AND NOTES	YEAR	DENSITY	DECL	FRZ	YR	CONSRV
1	000100	C	SFR	100		PUD	0.00	0.00	1.00	LT		1.00	1.00	1.00	350,000.00	350,000.00	350,000							

REVIEW DATE 01/31/2024 BY KBA Total Acres: 0.00 Total Land Value: 350,000 Market: 0 Agricultural: 0 Common: 350,000 PRINTED 08/06/2024 BY SYS