LOT 13
BELLSOUTH ESMT IN OR 931/25
HARRISON COVE PB 6/197

RATNECHT JOANNE LIVING TRUST/RATNECHT JOANNE TRUST
95201 MACKINAS CIRCLE
FERNANDINA BEACH, FL 32034

2024

00-00-30-0283-0013-0000

NASSAU COUNTY PROPERTY

BUILDING CHARACTERISTICS

ELEMENT	CD	CONSTRUCTION
Exterior Wall	10	ABOVE AVG 70
Exterior Wall	20	FACE BRICK 30
Roof Structur	08	IRREGULAR 100
Roof Cover	03	COMP SHNGL 100
Interior Wall	05	DRYWALL 100
Interior Floo	14	CARPET 70
Interior Floo	11	CLAY TILE 30
Air Condition	03	CENTRAL 100
Heating Type	04	AIR DUCTED 100
Bedrooms		4 100
Bathrooms		3.5 100
Frame	02	WOOD FRAME 100
Stories	2.	2. 100
Units		0 100
Occupancy	00	NONE 100
Quality	04	Quality Level 04
DOR CODE	0100	SINGLE FAMILY
MAP NUM		MKT AREA 03
NEIGHBORHOOD/LOC	3034.00	

AREA TYPE	TOTAL GROSS AREA	PCT OF BASE	TOT ADJ AREA	SUBAREA MARKET VALUE
BAS	1,798	100	1,798	261,858
DCK	28	10	3	437
FGR	594	55	327	47,623
FOP	252	30	76	11,068
FSP	339	40	136	19,807
FUS	433	100	433	63,062
FUS	755	100	755	109,957
PTO	54	5	3	437
UOP	26	20	5	728
TOTALS	4,279		3,536	514,977

MARKET ADJUSTMENTS

TYPE	MDL	EFF. AREA	TOT ADJ PTS	EFF. BASE RATE	REPL. COST NEW	AYB	EYB	ECON	FNCT		NORM	% COND
0500	01	3,536	108.5805	162.87	575,908	2004	2004	0	0	0	10.58	89.42

1 SFR CUST – 100% - 2005 Heated Area: 2986 HX Base Yr 2005

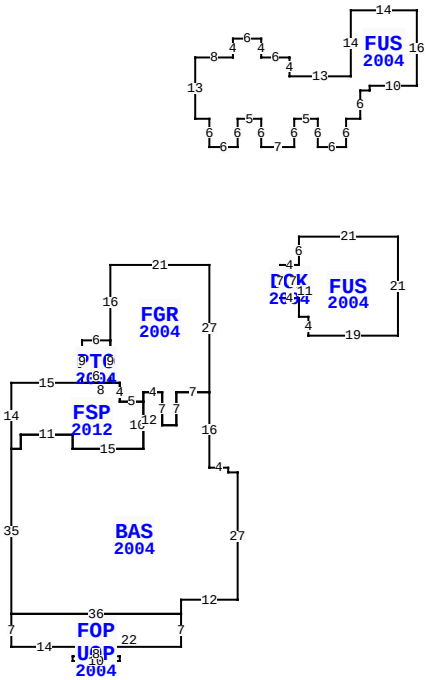

95201 MACKINAS CIR, FERNANDINA BEACH

BLD DATE		LGL DATE	
XF DATE		LAND DATE	
INC DATE		AG DATE	

VALUATION SUMMARY

VALUATION BY		STANDARD
Tax Group: 8	Tax Dist:	
BUILDING MARKET VALUE		514,977
TOTAL MARKET OB/XF VALUE		8,809
TOTAL LAND VALUE - MARKET		350,000
TOTAL MARKET VALUE		873,786
SOH/AGL Deduction		437,408
ASSESSED VALUE		436,378
TOTAL EXEMPTION VALUE	HX HB VX WX	60,000
BASE TAXABLE VALUE		376,378
TOTAL JUST VALUE		873,786
NCON VALUE		0
INCOME VALUE		
PREVIOUS YEAR MKT VALUE		851,392

PERMIT NUM	DESCRIPTION	AMT	ISSUED
B1225861	SCRN LANAI	1,700	03/01/2012
R035032	REPAIR/RRF	3,200	05/01/2003
B0311056	FOUNDATION	5,500	04/01/2003

SALES DATA

OFF RECORD Number	DATE	TYPE INST	Q / U	V / I	RSN CD	SALE PRICE
2276/1476	5/20/2019	SW	U	I	11	100
GRANTOR: RATNECHT JOANNE						
GRANTEE: RATNECHT JOANNE LIV						
1232/1687	5/24/2004	WD	U	V	07	100
GRANTOR: CH CONSTRUCTION INC						
GRANTEE: RATNECHT RONALD L &						

BUILDING NOTES

BUILDING DIMENSIONS

FGR=[YR=2004] W21 S16 PTO=[YR=2004] W6 S9 FSP=[YR=2012] W15 S14 BAS=[YR=2004] S35 FOP=[YR=2004] S7 E14 UOP=[YR=2004] S2 W1 S1 E10 N1 W1 N2 W8$ E22 N7 W36 $ E36 N3 E12 N27 W2 N1 W4 N16 W7 S7 W3 N7 W4 S12 W15 N3 W11 S3 W2$ E2 N3 E11 S3 E15 N10 W5 N4 W8$ E6 N9$ S9 E2 S4 E5 N2 E4 S7 E3 N7 E7 N27$ PTR=E15 DCK=[YR=2004] E4 FUS=[YR=2004] N6 E21 S21 W19 N4 W2 N11$ S7 W4 N7$ W15$ PTR=N25 FUS=[YR=2004] N6 W3 N13 E8 N4 E6 S4 E6 S4 E13 N14 E14 S16 W10 S1 W2 S6 W3 S6 W6 N6 W5 S6 W7 N6 W5 S6 W6$ S25$.

EXTRA FEATURES

LN	OB/XF CODE	DESCRIPTION	BLD	CAP	L	W	UNITS	UT	Adj R	ADJ UNIT PRICE	ORIG COND	YEAR ON	YEAR ACTUAL	Q	% COND	OB/XF MKT VALUE	NOTES
1	0500	FP-PRE FAB	0	100	0	0	1.00	UT	3,500.00	3,500.00	100	2004	2004	3	88	3,080	
2	0812	CONCRETE C	0	100	0	0	1,435.00	SF	4.00	4.00	100	2004	2004	3	84	4,822	
3	0855	CONC PAVER	0	100	0	0	108.00	SF	10.00	10.00	100	2004	2004	3	84	907	

LAND DESCRIPTION

TOTAL OB/XF 8,809

LN	USE CODE	CLS	LAND USE DESCRIPTION	CAP	RD	LOC ZONE	FRONT	DEPTH	TOT LND UTS	UNIT TYPE	DT	DPTH FACT	% COND	TOT ADJ	UNIT PRICE	ADJ UNIT PRICE	LAND VALUE	OTHER ADJUSTMENTS AND NOTES	YEAR	DENSITY	DECL	FRZ	YR	CONSRV
1	000100	C	SFR	100		PUD	0.00	0.00	1.00	LT		1.00	1.00	1.00	350,000.00	350,000.00	350,000							

REVIEW DATE 01/31/2024 BY KBA Total Acres: 0.00 Total Land Value: 350,000 Market: 0 Agricultural: 0 Common: 350,000 PRINTED 08/06/2024 BY SYS