LOT 12
HARRISON COVE PB 6/197

SNYDER KEVIN G & JENNIFER L L/E/
95225 MACKINAS CIR
FERNANDINA BEACH, FL 32034

2024

00-00-30-0283-0012-0000

BUILDING CHARACTERISTICS

ELEMENT	CD	CONSTRUCTION
Exterior Wall	14	WD SHINGLE 100
Roof Structur	08	IRREGULAR 100
Roof Cover	03	COMP SHNGL 100
Interior Wall	05	DRYWALL 100
Interior Floo	14	CARPET 70
Interior Floo	12	HARDWOOD 30
Air Condition	03	CENTRAL 100
Heating Type	04	AIR DUCTED 100
Bedrooms		4 100
Bathrooms		2.5 100
Frame	02	WOOD FRAME 100
Stories	2.	2. 100
Units		0 100
Occupancy	00	NONE 100
Quality	04	Quality Level 04
DOR CODE	0100	SINGLE FAMILY
MAP NUM		MKT AREA 03
NEIGHBORHOOD/LOC	3034.00	

AREA TYPE	TOTAL GROSS AREA	PCT OF BASE	TOT ADJ AREA	SUBAREA MARKET VALUE
BAS	1,876	100	1,876	270,329
FGR	513	55	282	40,636
FOP	112	30	34	4,900
FOP	360	30	108	15,563
FUS	1,040	100	1,040	149,863
PTO	18	5	1	144
TOTALS	3,919		3,341	481,435

MARKET ADJUSTMENTS

TYPE	MDL	EFF. AREA	TOT ADJ PTS	EFF. BASE RATE	REPL. COST NEW	AYB	EYB	ECON	FNCT		NORM	% COND
0500	01	3,341	106.7430	160.11	534,928	2003	2003	0	0	0	10.00	90.00

1 SFR CUST – 100% - 2021 Heated Area: 2916 HX Base Yr 2021

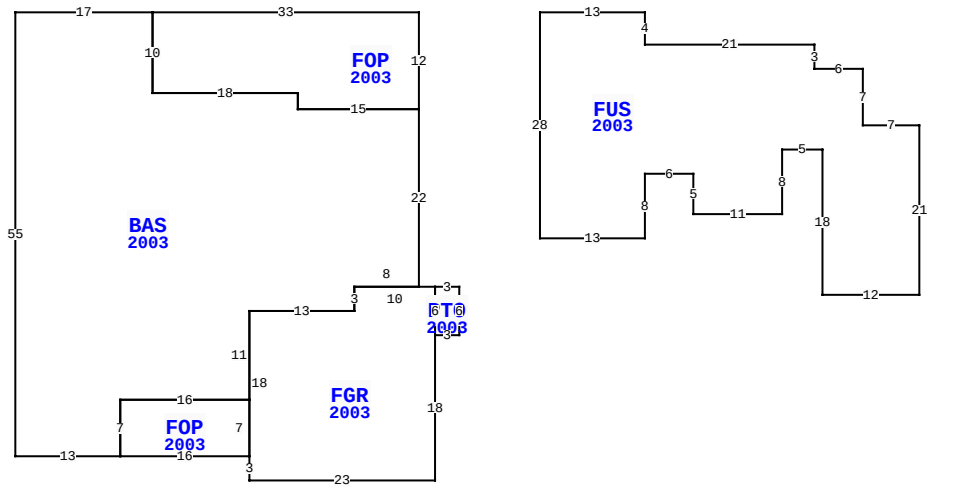

95225 MACKINAS CIR, FERNANDINA BEACH

BLD DATE		LGL DATE	
XF DATE		LAND DATE	
INC DATE		AG DATE	

NASSAU COUNTY PROPERTY

PAGE 1 of 1 8

VALUATION SUMMARY

VALUATION BY		STANDARD
Tax Group: 8	Tax Dist:	
BUILDING MARKET VALUE		481,435
TOTAL MARKET OB/XF VALUE		59,568
TOTAL LAND VALUE - MARKET		350,000
TOTAL MARKET VALUE		891,003
SOH/AGL Deduction		288,390
ASSESSED VALUE		602,613
TOTAL EXEMPTION VALUE	HX HB VX	55,000
BASE TAXABLE VALUE		547,613
TOTAL JUST VALUE		891,003
NCON VALUE		0
INCOME VALUE		
PREVIOUS YEAR MKT VALUE		871,498

PERMIT NUM	DESCRIPTION	AMT	ISSUED
B1632573	SCRNENCL	0	06/01/2016
B1631828	SWIM POOL	38,500	02/01/2016
B0209228	NEW CONSTR	220,000	01/01/2002

SALES DATA

OFF RECORD Number	DATE	TYPE INST	Q / U	V / I	RSN CD	SALE PRICE
2724/544	7/11/2024	LE	U	I	11	100
GRANTOR: SNYDER KEVIN G & JENN						
GRANTEE: HODGSON LINDSAY MAR						
2402/1335	10/23/2020	WD	Q	I	01	650,000
GRANTOR: BULTMAN JOHN & ANDREA						
GRANTEE: SNYDER KEVIN G & JE						

BUILDING NOTES

BUILDING DIMENSIONS

FOP=[YR=2003] W33 BAS=[YR=2003] W17 S55 E13 FOP=[YR=2003] E16 FGR=[YR=2003] S3 E23 N18 PTO=[YR=2003] E3 N6 W3 S6 $ N6 W10 S3 W13 S18 $ N7 W16 S7 $ N7 E16 N11 E13 N3 E8 N22 W15 N2 W18 N10 $ S10 E18 S2 E15 N12 $ PTR= E15 FUS=[YR=2003] E13 S4 E21 S3 E6 S7 E7 S21 W12 N18 W5 S8 W11 N5 W6 S8 W13 N28 $ W15 $.

EXTRA FEATURES

LN	OB/XF CODE	DESCRIPTION	BLD	CAP	L	W	UNITS	UT	Adj R	ADJ UNIT PRICE	ORIG COND	YEAR ON	YEAR ACTUAL	Q	% COND	OB/XF MKT VALUE	NOTES
1	0855	CONC PAVER	0	100	0	0	706.00	SF	10.00	10.00	100	2003	2003	3	83	5,860	
2	0855	CONC PAVER	0	100	21	3	63.00	SF	10.00	10.00	100	2003	2003	3	83	523	
3	0861	POOL GUNIT	0	100	0	0	338.00	SF	85.00	85.00	100	2016	2016	3	81	23,271	
4	0911	SCRN RM A	0	100	0	0	1,344.00	SF	17.50	17.50	100	2016	2016	3	74	17,405	
5	0855	CONC PAVER	0	100	0	0	1,006.00	SF	10.00	10.00	100	2016	2016	3	96	9,658	
6	0855	CONC PAVER	0	100	0	0	99.00	SF	10.00	10.00	100	2016	2016	3	96	950	
7	0855	CONC PAVER	0	100	0	0	198.00	SF	10.00	10.00	100	2016	2016	3	96	1,901	

LAND DESCRIPTION

TOTAL OB/XF 59,568

LN	USE CODE	CLS	LAND USE DESCRIPTION	CAP	RD	LOC ZONE	FRONT	DEPTH	TOT LND UTS	UNIT TYPE	DT	DPTH FACT	% COND	TOT ADJ	UNIT PRICE	ADJ UNIT PRICE	LAND VALUE	OTHER ADJUSTMENTS AND NOTES	YEAR	DENSITY	DECL	FRZ	YR	CONSRV
1	000100	C	SFR	100		PUD	0.00	0.00	1.00	LT		1.00	1.00	1.00	350,000.00	350,000.00	350,000							

REVIEW DATE 01/31/2024 BY KBA Total Acres: 0.00 Total Land Value: 350,000 Market: 0 Agricultural: 0 Common: 350,000 PRINTED 08/06/2024 BY SYS