LOT 15 IN OR 2720/1862
(EX OR 2153/657)
GURNIE OAKS SUB PB 5/2 &

LADIES OF THE SOUTHSIDE LLC
225 DIVISION ST
FERNANDINA BEACH, FL 32034

**2024**

**00-00-30-0280-0015-0000**

## BUILDING CHARACTERISTICS

| ELEMENT | CD | CONSTRUCTION |
|---|---|---|
| Exterior Wall | 05 | AVERAGE 100 |
| Roof Structur | 03 | GABLE/HIP 100 |
| Roof Cover | 03 | COMP SHNGL 100 |
| Interior Wall | 05 | DRYWALL 100 |
| Interior Floo | 12 | HARDWOOD 80 |
| Interior Floo | 07 | CORK/VTILE 20 |
| Air Condition | 03 | CENTRAL 100 |
| Heating Type | 04 | AIR DUCTED 100 |
| Bedrooms | | 3 100 |
| Bathrooms | | 1 100 |
| Frame | 02 | WOOD FRAME 100 |
| Stories | 1. | 1. 100 |
| Units | | 0 100 |
| BUD8 Adjustme | 05 | DIST 1A 100 |
| Occupancy | 00 | NONE 100 |
| Quality | 04 | Quality Level 04 |

| | | | |
|---|---|---|---|
| DOR CODE | 0800 | MULTI-FAMILY | |
| MAP NUM | | MKT AREA | 03 |
| NEIGHBORHOOD/LOC | 3026.00 | | |

| AREA TYPE | TOTAL GROSS AREA | PCT OF BASE | TOT ADJ AREA | SUBAREA MARKET VALUE |
|---|---|---|---|---|
| BAS | 748 | 100 | 748 | 100,120 |
| FOP | 108 | 30 | 32 | 4,283 |
| STP | 15 | 10 | 2 | 268 |
| TOTALS | 871 | | 782 | 104,670 |

## MARKET ADJUSTMENTS

| TYPE | MDL | EFF. AREA | TOT ADJ PTS | EFF. BASE RATE | REPL. COST NEW | AYB | EYB | ECON | FNCT | | NORM | % COND |
|---|---|---|---|---|---|---|---|---|---|---|---|---|
| 0900 | 01 | 782 | 118.6500 | 148.31 | 115,978 | 1963 | 2003 | 0 | 0 | 0 | 9.75 | 90.25 |

1 SNGL FAM – 0% - 0 Heated Area: 748 HX Base Yr

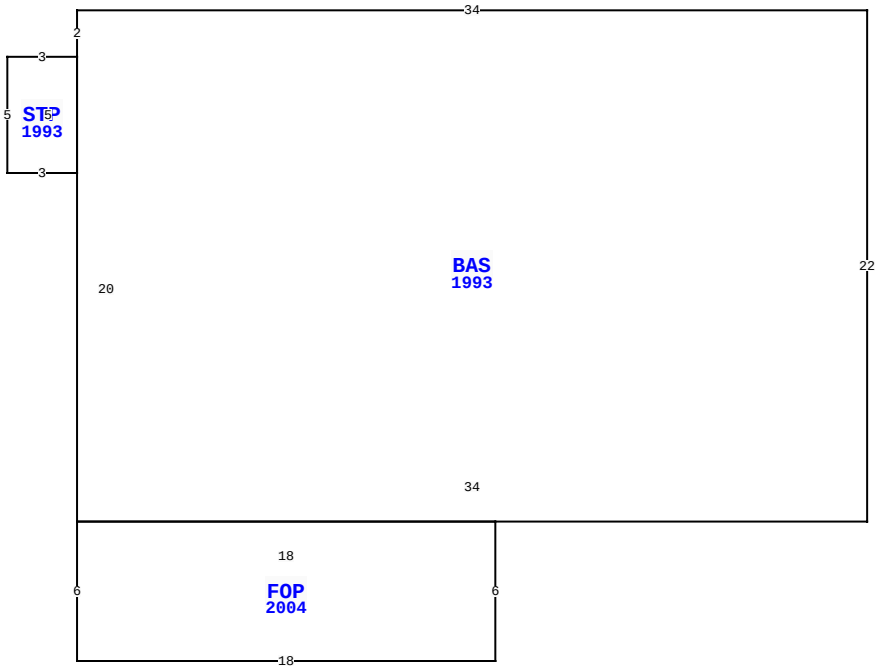


1522 STEWART AV, FERNANDINA BEACH

| | | | |
|---|---|---|---|
| BLD DATE | | LGL DATE | |
| XF DATE | | LAND DATE | |
| INC DATE | | AG DATE | |

## NASSAU COUNTY PROPERTY

PAGE 1 of 2 8

### VALUATION SUMMARY

| | |
|---|---|
| VALUATION BY | STANDARD |
| Tax Group: 8 | Tax Dist: |
| BUILDING MARKET VALUE | 248,513 |
| TOTAL MARKET OB/XF VALUE | 361 |
| TOTAL LAND VALUE - MARKET | 131,250 |
| TOTAL MARKET VALUE | 380,124 |
| SOH/AGL Deduction | 44,450 |
| ASSESSED VALUE | 335,674 |
| TOTAL EXEMPTION VALUE | 0 |
| BASE TAXABLE VALUE | 335,674 |
| TOTAL JUST VALUE | 380,124 |
| NCON VALUE | 0 |
| INCOME VALUE | |
| PREVIOUS YEAR MKT VALUE | 369,018 |

| PERMIT NUM | DESCRIPTION | AMT | ISSUED |
|---|---|---|---|
| | | | |

## SALES DATA

| OFF RECORD Number | DATE | TYPE INST | Q U / | V I / | RSN CD | SALE PRICE |
|---|---|---|---|---|---|---|
| 2720/1862 | 6/24/2024 | WD | Q | I | 01 | 429,000 |
| GRANTOR: WEBER RACHELLE J | | | | | | |
| GRANTEE: LADIES OF THE SOUTH | | | | | | |
| 2189/1846 | 4/13/2018 | WD | Q | I | 01 | 315,000 |
| GRANTOR: CABELL JOHN ET AL | | | | | | |
| GRANTEE: WEBER RACHELLE J | | | | | | |

## BUILDING NOTES

## BUILDING DIMENSIONS

BAS=[YR=1993] W34 S2 STP=[YR=1993] W3 S5 E3 N5 $ S20
FOP=[YR=2004] S6 E18 N6 W18 $ E34 N22 $.

## EXTRA FEATURES

| LN | OB/XF CODE | DESCRIPTION | BLD | CAP | L | W | UNITS | UT | Adj R | ADJ UNIT PRICE | ORIG COND | YEAR ON | YEAR ACTUAL | Q | % COND | OB/XF MKT VALUE | NOTES |
|---|---|---|---|---|---|---|---|---|---|---|---|---|---|---|---|---|---|
| 1 | 0810 | CONCRETE A | 0 | 0 | 12 | 3 | 36.00 | SF | 6.50 | 6.50 | 100 | 1995 | 1995 | 3 | 70 | 164 | |
| 2 | 0810 | CONCRETE A | 0 | 0 | 0 | 0 | 36.00 | SF | 6.50 | 6.50 | 100 | 2004 | 2004 | 3 | 84 | 197 | |

## LAND DESCRIPTION

TOTAL OB/XF 361

| LN | USE CODE | CLS | LAND USE DESCRIPTION | CAP | RD | LOC ZONE | FRONT | DEPTH | TOT LND UTS | UNIT TYPE | DT | DPTH FACT | % COND | TOT ADJ | UNIT PRICE | ADJ UNIT PRICE | LAND VALUE | OTHER ADJUSTMENTS AND NOTES | YEAR | DENSITY | DECL | FRZ | YR | CONSRV |
|---|---|---|---|---|---|---|---|---|---|---|---|---|---|---|---|---|---|---|---|---|---|---|---|---|
| 1 | 000100 | C | SFR | 0 | | RSF-2 | 0.00 | 0.00 | 1.00 | LT | | 1.00 | 1.00 | 1.00 | 75,000.00 | 75,000.00 | 75,000 | | | | | | | |
| 2 | 000100 | C | SFR | 0 | | RSF-2 | 0.00 | 0.00 | 1.00 | LT | | 1.00 | 1.00 | 0.75 | 75,000.00 | 56,250.00 | 56,250 | | | | | | | |

REVIEW DATE 01/12/2024 BY KBA Total Acres: 0.00 Total Land Value: 131,250 Market: 0 Agricultural: 0 Common: 131,250 PRINTED 08/06/2024 BY SYS

LOT 15 IN OR 2720/1862
(EX OR 2153/657)
GURNIE OAKS SUB PB 5/2 &

LADIES OF THE SOUTHSIDE LLC
225 DIVISION ST
FERNANDINA BEACH, FL 32034

**2024**

**00-00-30-0280-0015-0000**

## NASSAU COUNTY PROPERTY



## BUILDING CHARACTERISTICS

| ELEMENT | CD | CONSTRUCTION |
|---|---|---|
| Exterior Wall | 10 | ABOVE AVG 100 |
| Roof Structur | 03 | GABLE/HIP 100 |
| Roof Cover | 03 | COMP SHNGL 100 |
| Interior Wall | 05 | DRYWALL 100 |
| Interior Floo | 09 | PINE WOOD 50 |
| Interior Floo | 14 | CARPET 50 |
| Air Condition | 03 | CENTRAL 100 |
| Heating Type | 04 | AIR DUCTED 100 |
| Bedrooms | | 4 100 |
| Bathrooms | | 2 100 |
| Frame | 02 | WOOD FRAME 100 |
| Stories | 2. | 2. 100 |
| Units | | 0 100 |
| Occupancy | 00 | NONE 100 |
| Quality | 03 | Quality Level 03 |

DOR CODE 0800 MULTI-FAMILY
MAP NUM | MKT AREA 03
NEIGHBORHOOD/LOC 3026.00

| AREA TYPE | TOTAL GROSS AREA | PCT OF BASE | TOT ADJ AREA | SUBAREA MARKET VALUE |
|---|---|---|---|---|
| BAS | 754 | 100 | 754 | 70,980 |
| DCK | 200 | 10 | 20 | 1,882 |
| FUS | 754 | 100 | 754 | 70,980 |
| TOTALS | 1,708 | | 1,528 | 143,843 |

## MARKET ADJUSTMENTS

| TYPE | MDL | EFF. AREA | TOT ADJ PTS | EFF. BASE RATE | REPL. COST NEW | AYB | EYB | ECON | FNCT | | NORM | % COND |
|---|---|---|---|---|---|---|---|---|---|---|---|---|
| 0100 | 01 | 1,528 | 109.5000 | 104.02 | 158,943 | 1973 | 2003 | 0 | 0 | 0 | 9.50 | 90.50 |

2 SINGLE FAM – 0% - 0 Heated Area: 1508 HX Base Yr

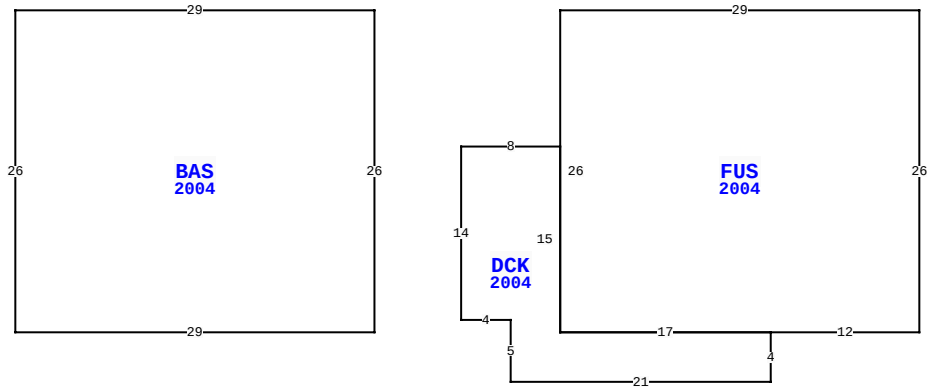


1522 STEWART AV, FERNANDINA BEACH

| | | | |
|---|---|---|---|
| BLD DATE | | LGL DATE | |
| XF DATE | | LAND DATE | |
| INC DATE | | AG DATE | |

## VALUATION SUMMARY

| | |
|---|---|
| VALUATION BY | STANDARD |
| Tax Group: 8 | Tax Dist: |
| BUILDING MARKET VALUE | 248,513 |
| TOTAL MARKET OB/XF VALUE | 361 |
| TOTAL LAND VALUE - MARKET | 131,250 |
| TOTAL MARKET VALUE | 380,124 |
| SOH/AGL Deduction | 44,450 |
| ASSESSED VALUE | 335,674 |
| TOTAL EXEMPTION VALUE | 0 |
| BASE TAXABLE VALUE | 335,674 |
| TOTAL JUST VALUE | 380,124 |
| NCON VALUE | 0 |
| INCOME VALUE | |
| PREVIOUS YEAR MKT VALUE | 369,018 |

| PERMIT NUM | DESCRIPTION | AMT | ISSUED |
|---|---|---|---|
| | | | |

## SALES DATA

| OFF RECORD Number | DATE | TYPE INST | Q / U | V / I | RSN CD | SALE PRICE |
|---|---|---|---|---|---|---|
| 2720/1862 | 6/24/2024 | WD | Q | I | 01 | 429,000 |
| GRANTOR: WEBER RACHELLE J | | | | | | |
| GRANTEE: LADIES OF THE SOUTH | | | | | | |
| 2189/1846 | 4/13/2018 | WD | Q | I | 01 | 315,000 |
| GRANTOR: CABELL JOHN ET AL | | | | | | |
| GRANTEE: WEBER RACHELLE J | | | | | | |

## BUILDING NOTES

## BUILDING DIMENSIONS

BAS=[YR=2004] W29 S26 E29 N26 $ PTR= E15 FUS=[YR=2004] E29 S26 W12 DCK=[YR=2004] S4 W21 N5 W4 N14 E8 S15 E17 $ W17 N26 $ W15 $ .

## EXTRA FEATURES

| L N | OB/XF CODE | DESCRIPTION | BLD | CAP | L | W | UNITS | UT | Adj R | ADJ UNIT PRICE | ORIG COND | YEAR ON | YEAR ACTUAL | Q | % COND | OB/XF MKT VALUE | NOTES |
|---|---|---|---|---|---|---|---|---|---|---|---|---|---|---|---|---|---|

## LAND DESCRIPTION

TOTAL OB/XF 0

| L N | USE CODE | CLS | LAND USE DESCRIPTION | CAP | R D | LOC ZONE | FRONT | DEPTH | TOT LND UTS | UNIT TYPE | D T | DPTH FACT | % COND | TOT ADJ | UNIT PRICE | ADJ UNIT PRICE | LAND VALUE | OTHER ADJUSTMENTS AND NOTES | YEAR | DENSITY | DECL | FRZ | YR | CONSRV |
|---|---|---|---|---|---|---|---|---|---|---|---|---|---|---|---|---|---|---|---|---|---|---|---|---|

REVIEW DATE 01/12/2024 BY KBA Total Acres: 0.00 Total Land Value: 131,250 Market: 0 Agricultural: 0 Common: 131,250 PRINTED 08/06/2024 BY SYS