TRACT A & PT TRACTS Q & R OF
GORDIE SUB UNR & LOTS 1,2 & 3
OF HERON POINTE PBK 7/216

MURRAY ANDREW & LESLIE
1231 MARIAN DR
FERNANDINA BEACH, FL 32034

2024

00-00-30-0265-000A-0000

NASSAU COUNTY PROPERTY

BUILDING CHARACTERISTICS

ELEMENT	CD	CONSTRUCTION
Exterior Wall	12	CEDAR 50
Exterior Wall	17	CB STUCCO 50
Roof Structur	03	GABLE/HIP 100
Roof Cover	03	COMP SHNGL 100
Interior Wall	05	DRYWALL 80
Interior Wall	04	PLYWOOD 20
Interior Floo	14	CARPET 70
Interior Floo	11	CLAY TILE 30
Air Condition	03	CENTRAL 100
Heating Type	04	AIR DUCTED 100
Bedrooms		2 100
Bathrooms		2 100
Frame	02	WOOD FRAME 100
Stories	2.	2. 100
Units		0 100
BUD8 Adjustme	05	DIST 1A 100
Occupancy	00	NONE 100
Quality	04	Quality Level 04
DOR CODE	0100	SINGLE FAMILY
MAP NUM		MKT AREA 03
NEIGHBORHOOD/LOC	3027.00	

AREA TYPE	TOTAL GROSS AREA	PCT OF BASE	TOT ADJ AREA	SUBAREA MARKET VALUE
BAL	30	15	4	428
BAL	330	15	50	5,359
BAS	1,528	100	1,528	163,760
FGR	552	55	304	32,580
FOP	21	30	6	643
FOP	372	30	112	12,003
FUS	1,688	100	1,688	180,909
STP	42	10	4	428
STR	121	10	12	1,286
UCP	320	20	64	6,859
TOTALS	5,652		4,128	442,411

MARKET ADJUSTMENTS

TYPE	MDL	EFF. AREA	TOT ADJ PTS	EFF. BASE RATE	REPL. COST NEW	AYB	EYB	ECON	FNCT		NORM	% COND
0900	01	4,128	99.6996	124.62	514,431	1976	1995	0	0	0	14.00	86.00

1 SNGL FAM – 100% - 2024 Heated Area: 3216 HX Base Yr 2024

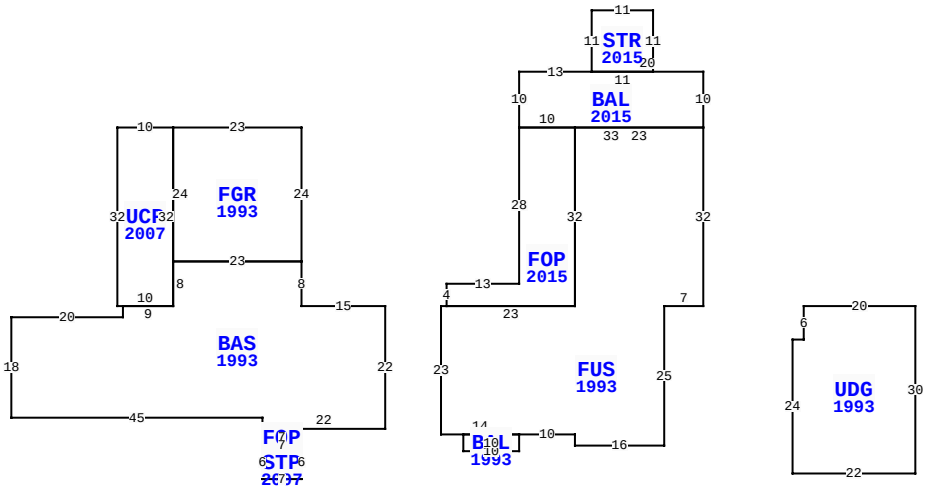

** This building has 11 Sub-Areas

1231 MARIAN DR, FERNANDINA BEACH

BLD DATE	05/13/2010 DJ	LGL DATE	
XF DATE		LAND DATE	03/26/2024 MLU
INC DATE		AG DATE	

VALUATION SUMMARY

VALUATION BY		STANDARD
Tax Group: 8	Tax Dist:	
BUILDING MARKET VALUE		442,411
TOTAL MARKET OB/XF VALUE		8,179
TOTAL LAND VALUE - MARKET		1,275,000
TOTAL MARKET VALUE		1,725,590
SOH/AGL Deduction		0
ASSESSED VALUE		1,725,590
TOTAL EXEMPTION VALUE	HX HB	50,000
BASE TAXABLE VALUE		1,675,590
TOTAL JUST VALUE		1,725,590
NCON VALUE		0
INCOME VALUE		
PREVIOUS YEAR MKT VALUE		1,576,445

PERMIT NUM	DESCRIPTION	AMT	ISSUED
P1317074	NEW CONSTR	0	12/01/2013
M1217637	H/AC	0	10/01/2012
B1226445	PAINT,DW	30,000	09/03/2012
B25318	ADDITION	99,999	11/01/2011
B24917	REPAIR/RRF	30,000	07/01/2011
0409	CHNGE SRVC	800	08/01/1993

SALES DATA

OFF RECORD Number	DATE	TYPE INST	Q U	V I	RSN CD	SALE PRICE
1744/0800	4/26/2011	WD	U	I	11	425,000
GRANTOR: AURORA LOAN SERVICES						
GRANTEE: MURRAY ANDREW & LES						
1666/1689	3/12/2010	CT	U	I	18	100
GRANTOR: CLERK OF COURT						
GRANTEE: AURORA LOAN SERVICE						

EXTRA FEATURES

LN	OB/XF CODE	DESCRIPTION	BLD	CAP	L	W	UNITS	UT	Adj R	ADJ UNIT PRICE	ORIG COND	YEAR ON	YEAR ACTUAL	Q	% COND	OB/XF MKT VALUE	NOTES
1	0812	CONCRETE C	0	100	0	0	1,881.00	SF	4.00	4.00	100	1984	1984	3	44	3,311	
2	0500	FP-PRE FAB	0	100	0	0	1.00	UT	3,500.00	3,500.00	100	1980	1980	3	46.5	1,628	
3	0462	ST/AL FNC	0	100	0	0	1,080.00	SF	10.00	10.00	100	2002	2002	3	30	3,240	

BUILDING NOTES

BUILDING DIMENSIONS

BAS=[YR=1993] W15 N8 FGR=[YR=1993] N24 W23 UCP=[YR=2007] W10 S32 E10 N32$ S24 E23$ W23 S8 W9 S2 W20 S18 E45 S2
FOP=[YR=2007] S3 STP=[YR=2007] S6 E7 N6 W7$ E7 N3 W7$ E22 N22$ PTR= E10 FUS=[YR=1993] E1 FOP=[YR=2015] N4 E13 N28
BAL=[YR=2015] N10 E13 STR=[YR=2015] N11 E11 S11 W11$ E20 S10 W33$ E10 S32 W23$E23 N32 E23 S32W7 S25 W16 N2 W10
BAL=[YR=1993] S3 W10 N3 E10$ W14 N23$ W10$ PTR= E75
UDG=[YR=1993] E20 S30 W22 N24 E2 N6$ W75$.

LAND DESCRIPTION

TOTAL OB/XF 8,179

LN	USE CODE	CLS	LAND USE DESCRIPTION	CAP	RD	LOC ZONE	FRONT	DEPTH	TOT LND UTS	UNIT TYPE	DT	DPTH FACT	% COND	TOT ADJ	UNIT PRICE	ADJ UNIT PRICE	LAND VALUE	OTHER ADJUSTMENTS AND NOTES	YEAR	DENSITY	DECL	FRZ	YR	CONSRV
1	000132	C	SFR RIVER	100		RSF-1	220.00	280.00	220.00	FF		1.00	1.00	0.50	7,500.00	3,750.00	825,000							
2	000000	C	VAC RES	100		RSF-1	0.00	0.00	3.00	LT		1.00	1.00	0.50	300,000.00	150,000.00	450,000							

REVIEW DATE 01/31/2024 BY KBA Total Acres: 0.00 Total Land Value: 1,275,000 Market: 0 Agricultural: 0 Common: 1,275,000 PRINTED 08/06/2024 BY SYS