PT OF LOT 1 & PT OF CLOSED R/W
ABND BY RES IN OR 880/1308
IN OR 1972/1611

CROFT KENT G & NANCY S
7826 CHELSEA ST
BALTIMORE, MD 21204

2024

00-00-30-0260-0001-0020

BUILDING CHARACTERISTICS

ELEMENT	CD	CONSTRUCTION
Exterior Wall	14	WD SHINGLE 100
Roof Structur	03	GABLE/HIP 100
Roof Cover	03	COMP SHNGL 100
Interior Wall	05	DRYWALL 90
Interior Wall	08	DECORATIVE 10
Interior Floo	12	HARDWOOD 60
Interior Floo	14	CARPET 40
Air Condition	03	CENTRAL 100
Heating Type	04	AIR DUCTED 100
Bedrooms		3 100
Bathrooms		3 100
Frame	02	WOOD FRAME 100
Stories	2.	2. 100
Units		0 100
Quality	06	Quality Level 06
DOR CODE	0100	SINGLE FAMILY
MAP NUM		MKT AREA 03
NEIGHBORHOOD/LOC	3027.00	

AREA TYPE	TOTAL GROSS AREA	PCT OF BASE	TOT ADJ AREA	SUBAREA MARKET VALUE
BAS	2,402	100	2,402	401,461
BAS	294	100	294	49,138
FGR	649	55	357	59,668
FOP	14	30	4	669
FOP	32	30	10	1,672
FOP	581	30	174	29,082
FSP	476	40	190	31,756
FST	90	55	50	8,357
FUS	380	100	380	63,512
FUS	1,722	100	1,722	287,809
TOTALS	7,428		5,741	959,530

MARKET ADJUSTMENTS

TYPE	MDL	EFF. AREA	TOT ADJ PTS	EFF. BASE RATE	REPL. COST NEW	AYB	EYB	ECON	FNCT		NORM	% COND
0900	11	5,741	145.3358	181.67	1,042,967	1997	2007	0	0	0	8.00	92.00

2 SNGL FAM – 0% - 0 Heated Area: 4798 HX Base Yr

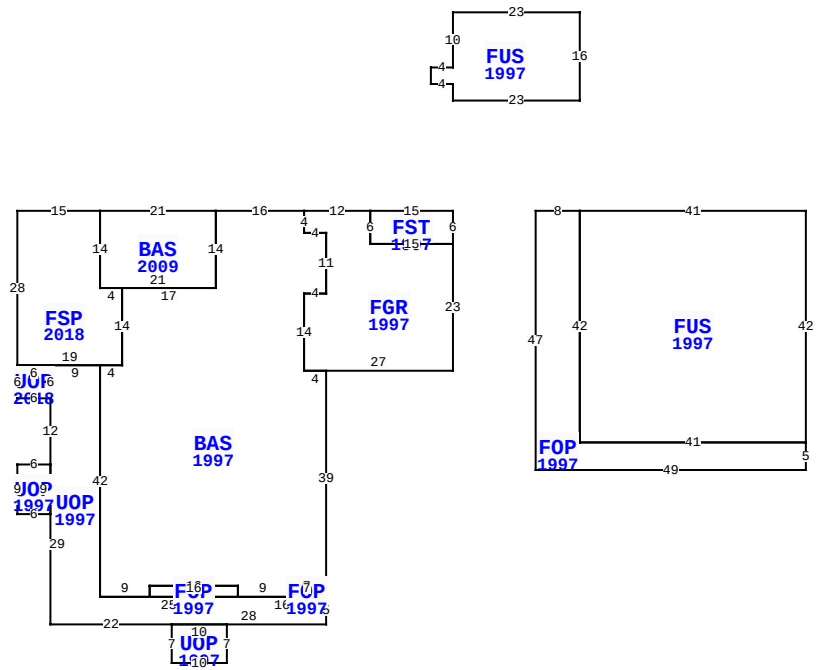

** This building has 14 Sub-Areas

1225 GERBING RD, FERNANDINA BEACH

BLD DATE		LGL DATE	
XF DATE		LAND DATE	
INC DATE		AG DATE	

NASSAU COUNTY PROPERTY

PAGE 1 of 2 8

VALUATION SUMMARY

VALUATION BY	STANDARD
Tax Group: 8	Tax Dist:
BUILDING MARKET VALUE	959,530
TOTAL MARKET OB/XF VALUE	63,363
TOTAL LAND VALUE - MARKET	1,518,750
TOTAL MARKET VALUE	2,541,643
SOH/AGL Deduction	0
ASSESSED VALUE	2,541,643
TOTAL EXEMPTION VALUE	0
BASE TAXABLE VALUE	2,541,643
TOTAL JUST VALUE	2,541,643
NCON VALUE	0
INCOME VALUE	
PREVIOUS YEAR MKT VALUE	2,499,052

PERMIT NUM	DESCRIPTION	AMT	ISSUED
B180040	REMODEL	102,150	01/02/2018
E24956	GENERATOR	0	04/01/2012
G01720	GAS	475	04/01/2012
B22327	REMODEL	6,000	03/01/2009
B9603467	NEW CONSTR	300,000	11/01/1996
B9603396	DEMOLITION	7,500	10/01/1996

SALES DATA

OFF RECORD Number	DATE	TYPE INST	Q U	V I	RSN CD	SALE PRICE
1972/1611	4/01/2015	WD	Q	I	01	2,350,000
GRANTOR: MCCRANIE DANIEL I & D						
GRANTEE: CROFT KENT G & NANC						
0646/0099	1/09/1992	WD	Q	I		276,300
GRANTOR: SMITH MICHELLE						
GRANTEE: MCCRANIE DANIEL I						

BUILDING NOTES

BUILDING DIMENSIONS

FST=[YR=1997] W15 FGR=[YR=1997] W12 BAS=[YR=1997] W16 BAS=[YR=2009] W21 FSP=[YR=2018] W15 S28 UOP=[YR=2018] S6 E6 UOP=[YR=1997] S12 UOP=[YR=1997] W6 S9 E6 N9$ S29 E22 UOP=[YR=1997] S7 E10 N7 W10$ E28 N5 FOP=[YR=1997] N2 W7 S2 E7$ W16 FOP=[YR=1997] N2 W16 S2 E16$ W25 N42 W9 S6$ N6W6$ E19 N14 W4 N14$ S14 E21N14$ S14 W17 S14 W4 S42 E9 N2 E16 S2 E9 N2 E7 N39 W4 N14 E4 N11 W4 N4$ S4 E4S11 W4 S14 E27 N23 W15 N6$ S6 E15 N6$ PTR=E15 FOP=[YR=1997] E8 FUS=[YR=1997] E41S42 W41 N42$ S42 E41 S5 W49 N47$ W15$ PTR=N20 FUS=[YR=1997] N3 W4 N3 E4 N10 E23 S16 W23$ S20$.

EXTRA FEATURES

LN	OB/XF CODE	DESCRIPTION	BLD	CAP	L	W	UNITS	UT	Adj R	ADJ UNIT PRICE	ORIG COND	YEAR ON	YEAR ACTUAL	Q	% COND	OB/XF MKT VALUE	NOTES
1	0845	KOOL DECK	0	0	0	0	985.00	SF	7.25	7.25	100	1991	1991	3	62	4,428	
2	0861	POOL GUNIT	0	0	0	0	565.00	SF	85.00	85.00	100	1991	1991	3	20	9,605	
3	0300	BOAT DCK W	0	0	0	0	1,342.00	SF	40.00	40.00	100	1982	1982	3	20	10,736	
4	0350	CARPORT WD	0	0	14	10	140.00	SF	16.25	16.25	100	1982	1982	3	20	455	
5	0920	CWALL-WD/M	0	0	0	0	164.00	LF	390.00	390.00	100	1966	1966	3	20	12,792	
6	0504	FP-ELECTRI	0	0	0	0	1.00	UT	2,000.00	2,000.00	100	1997	1997	3	80	1,600	
7	0812	CONCRETE C	0	0	0	0	2,417.00	SF	4.00	4.00	100	1997	1997	3	73	7,058	
8	1076	TRELLIS A	0	0	10	5	50.00	SF	7.50	7.50	100	1992	1992	3	20	75	
9	0825	BRICK	0	0	0	0	328.00	SF	12.50	12.50	100	1997	1997	3	92	3,772	
10	1242	WD DECK A	0	0	0	0	112.00	SF	10.00	10.00	100	1997	1997	3	20	224	

TOTAL OB/XF 50,745

LAND DESCRIPTION

LN	USE CODE	CLS	LAND USE DESCRIPTION	CAP	RD	LOC ZONE	FRONT	DEPTH	TOT LND UTS	UNIT TYPE	DT	DPTH FACT	% COND	TOT ADJ	UNIT PRICE	ADJ UNIT PRICE	LAND VALUE	OTHER ADJUSTMENTS AND NOTES	YEAR	DENSITY	DECL	FRZ	YR	CONSRV
1	000132	C	SFR RIVER	0		RSF-	1162.00	180.00	162.00	FF		1.00	1.00	1.25	7,500.00	9,375.00	1,518,750							

REVIEW DATE 01/31/2024 BY KBA Total Acres: 0.00 Total Land Value: 1,518,750 Market: 0 Agricultural: 0 Common: 1,518,750 PRINTED 08/06/2024 BY SYS

PT OF LOT 1 & PT OF CLOSED R/W
ABND BY RES IN OR 880/1308
IN OR 1972/1611

CROFT KENT G & NANCY S
7826 CHELSEA ST
BALTIMORE, MD 21204

2024

00-00-30-0260-0001-0020

NASSAU COUNTY PROPERTY

BUILDING CHARACTERISTICS

ELEMENT	CD	CONSTRUCTION

DOR CODE	0100	SINGLE FAMILY	
MAP NUM		MKT AREA	03
NEIGHBORHOOD/LOC	3027.00		

AREA TYPE	TOTAL GROSS AREA	PCT OF BASE	TOT ADJ AREA	SUBAREA MARKET VALUE
TOTALS				

MARKET ADJUSTMENTS

TYPE	MDL	EFF. AREA	TOT ADJ PTS	EFF. BASE RATE	REPL. COST NEW	AYB	EYB	ECON	FNCT		NORM	% COND

BLD DATE		LGL DATE	
XF DATE		LAND DATE	
INC DATE		AG DATE	

VALUATION SUMMARY

VALUATION BY	STANDARD
Tax Group: 8	Tax Dist:
BUILDING MARKET VALUE	959,530
TOTAL MARKET OB/XF VALUE	63,363
TOTAL LAND VALUE - MARKET	1,518,750
TOTAL MARKET VALUE	2,541,643
SOH/AGL Deduction	0
ASSESSED VALUE	2,541,643
TOTAL EXEMPTION VALUE	0
BASE TAXABLE VALUE	2,541,643
TOTAL JUST VALUE	2,541,643
NCON VALUE	0
INCOME VALUE	
PREVIOUS YEAR MKT VALUE	2,499,052

PERMIT NUM	DESCRIPTION	AMT	ISSUED
7245	SWIM POOL	11,400	05/20/1991
6899	REPAIR/RRF	10,000	12/18/1990

SALES DATA

OFF RECORD Number	DATE	TYPE INST	Q U /	V I /	RSN CD	SALE PRICE
1972/1611	4/01/2015	WD	Q	I	01	2,350,000
GRANTOR: MCCRANIE DANIEL I & D						
GRANTEE: CROFT KENT G & NANC						
0646/0099	1/09/1992	WD	Q	I		276,300
GRANTOR: SMITH MICHELLE						
GRANTEE: MCCRANIE DANIEL I						

BUILDING NOTES

BUILDING DIMENSIONS

EXTRA FEATURES

LN	OB/XF CODE	DESCRIPTION	BLD	CAP	L	W	UNITS	UT	Adj R	ADJ UNIT PRICE	ORIG COND	YEAR ON	YEAR ACTUAL	Q	% COND	OB/XF MKT VALUE	NOTES
11	1076	TRELLIS A	0	0	14	8	112.00	SF	7.50	7.50	100	1999	1999	3	23	193	
12	0323	BOAT LFT H	0	0	0	0	1.00	UT	3,125.00	3,125.00	100	1999	1999	3	20	625	
13	0317	DCK PLNG W	0	0	0	0	8.00	UT	1,000.00	1,000.00	100	1997	1997	3	20	1,600	
14	0409	ELEVATOR R	0	0	0	0	1.00	UT	10,200.00	10,200.00	100	2009	2009	3	100	10,200	

LAND DESCRIPTION

TOTAL OB/XF 12,618

LN	USE CODE	CLS	LAND USE DESCRIPTION	CAP	RD	LOC ZONE	FRONT	DEPTH	TOT LND UTS	UNIT TYPE	DT	DPTH FACT	% COND	TOT ADJ	UNIT PRICE	ADJ UNIT PRICE	LAND VALUE	OTHER ADJUSTMENTS AND NOTES	YEAR	DENSITY	DECL	FRZ	YR	CONSRV

REVIEW DATE 01/31/2024 BY KBA Total Acres: 0.00 Total Land Value: 1,518,750 Market: 0 Agricultural: 0 Common: 1,518,750 PRINTED 08/06/2024 BY SYS