LOT 26
FLORENCE POINT PB 4/109 & 110

SMITH CHRIS/
5449 MARSH VIEW LN
FERNANDINA BEACH, FL 32034

2024

00-00-30-0250-0026-0000

BUILDING CHARACTERISTICS

ELEMENT	CD	CONSTRUCTION
Exterior Wall	05	AVERAGE 80
Exterior Wall	16	WD FR STUC 20
Roof Structur	03	GABLE/HIP 100
Roof Cover	03	COMP SHNGL 100
Interior Wall	05	DRYWALL 100
Interior Floo	14	CARPET 80
Interior Floo	11	CLAY TILE 20
Air Condition	03	CENTRAL 100
Heating Type	04	AIR DUCTED 100
Bedrooms		2 100
Bathrooms		2 100
Frame	02	WOOD FRAME 100
Stories	1.5	1.5 100
Units		0 100
Occupancy	00	NONE 100
Quality	06	Quality Level 06
DOR CODE	0100	SINGLE FAMILY
MAP NUM		MKT AREA 03
NEIGHBORHOOD/LOC	3035.00	

AREA TYPE	TOTAL GROSS AREA	PCT OF BASE	TOT ADJ AREA	SUBAREA MARKET VALUE
BAL	55	15	8	1,097
BAS	1,226	100	1,226	168,190
DCK	48	10	5	686
FGR	500	55	275	37,727
FOP	48	30	14	1,921
FSP	112	40	45	6,173
FUS	700	100	700	96,030
UOP	270	20	54	7,408
TOTALS	2,959		2,327	319,233

MARKET ADJUSTMENTS

TYPE	MDL	EFF. AREA	TOT ADJ PTS	EFF. BASE RATE	REPL. COST NEW	AYB	EYB	ECON	FNCT		NORM	% COND
0900	01	2,327	124.4300	155.54	361,942	1989	1999	0	0	0	11.80	88.20

1 SNGL FAM – 100% - 2021 Heated Area: 1926 HX Base Yr 2021

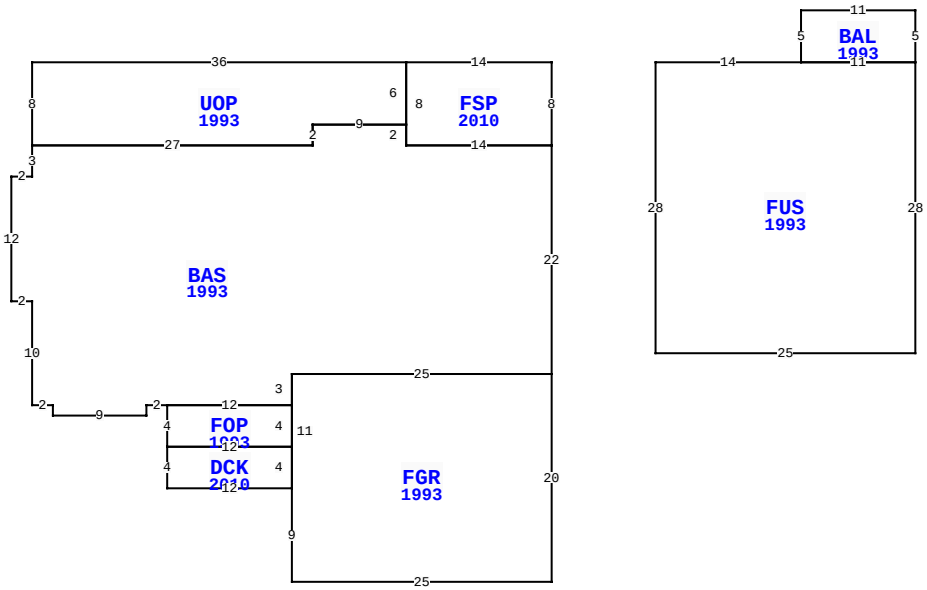

5449 MARSH VIEW LN, FERNANDINA BEACH

BLD DATE		LGL DATE	
XF DATE		LAND DATE	06/18/2024 MLU
INC DATE		AG DATE	

NASSAU COUNTY PROPERTY

PAGE 1 of 1 8

VALUATION SUMMARY

VALUATION BY		STANDARD
Tax Group: 8	Tax Dist:	
BUILDING MARKET VALUE		319,233
TOTAL MARKET OB/XF VALUE		5,962
TOTAL LAND VALUE - MARKET		350,000
TOTAL MARKET VALUE		675,195
SOH/AGL Deduction		272,678
ASSESSED VALUE		402,517
TOTAL EXEMPTION VALUE	HX HB	50,000
BASE TAXABLE VALUE		352,517
TOTAL JUST VALUE		675,195
NCON VALUE		0
INCOME VALUE		
PREVIOUS YEAR MKT VALUE		611,153

PERMIT NUM	DESCRIPTION	AMT	ISSUED
3269	NEW CONSTR	0	10/31/1988
2787	H/AC	3,000	10/31/1988
5468	NEW CONSTR	1,700	10/26/1988

SALES DATA

OFF RECORD Number	DATE	TYPE INST	Q / U	V / I	RSN CD	SALE PRICE
9999/9999	4/27/2020	CN	Q	I	02	440,000
GRANTOR: SHERWOOD GAYLE E & DA						
GRANTEE: SMITH CHRIS						
2040/1700	4/18/2016	WD	Q	I	02	270,000
GRANTOR: BURNS STEPHEN R & LAR						
GRANTEE: SHERWOOD GAYLE E &						

BUILDING NOTES

BUILDING DIMENSIONS

FSP=[YR=2010] W14 UOP=[YR=1993] W36 S8 BAS=[YR=1993] S3 W2 S12 E2 S10 E2 S1 E9 N1 E2 FOP=[YR=1993] S4 DCK=[YR=2010] S4 E12 FGR=[YR=1993] S9 E25N20 W25 S11$ N4 W12$ E12 N4 W12$ E12 N3 E25 N22 W14 N2 W9 S2 W27$ E27 N2 E9 N6$ S8 E14 N8$ PTR= E10 FUS=[YR=1993] E14 BAL=[YR=1993] N5 E11 S5 W11$ E11 S28 W25 N28$ W10$.

EXTRA FEATURES

LN	OB/XF CODE	DESCRIPTION	BLD	CAP	L	W	UNITS	UT	Adj R	ADJ UNIT PRICE	ORIG COND	YEAR ON	YEAR ACTUAL	Q	% COND	OB/XF MKT VALUE	NOTES
1	0500	FP-PRE FAB	0	100	0	0	1.00	UT	3,500.00	3,500.00	100	1989	1989	3	66	2,310	
2	0812	CONCRETE C	0	100	0	0	1,370.00	SF	4.00	4.00	100	1989	1989	3	57	3,124	
3	0820	WOOD WALK	0	100	19	3	57.00	SF	11.75	11.75	100	1989	1989	3	40	268	
4	1242	WD DECK A	0	100	0	0	130.00	SF	10.00	10.00	100	1989	1989	3	20	260	

LAND DESCRIPTION

TOTAL OB/XF 5,962

LN	USE CODE	CLS	LAND USE DESCRIPTION	CAP	RD	LOC ZONE	FRONT	DEPTH	TOT LND UTS	UNIT TYPE	DT	DPTH FACT	% COND	TOT ADJ	UNIT PRICE	ADJ UNIT PRICE	LAND VALUE	OTHER ADJUSTMENTS AND NOTES	YEAR	DENSITY	DECL	FRZ	YR	CONSRV
1	000100	C	SFR	100		RSF-1	0.00	0.00	1.00	LT		1.00	1.00	1.00	350,000.00	350,000.00	350,000							

REVIEW DATE 01/31/2024 BY KBA Total Acres: 0.00 Total Land Value: 350,000 Market: 0 Agricultural: 0 Common: 350,000 PRINTED 08/06/2024 BY SYS