LOT 21
IN OR 1572/62
FLORENCE POINT PB 4/109 & 110

PARISH TRUEMAN D & CYNTHIA R
5465 FLORENCE POINTE DRIVE
FERNANDINA BEACH, FL 32034

2024

00-00-30-0250-0021-0000

NASSAU COUNTY PROPERTY

BUILDING CHARACTERISTICS

ELEMENT	CD	CONSTRUCTION
Exterior Wall	10	ABOVE AVG 100
Roof Structur	08	IRREGULAR 100
Roof Cover	03	COMP SHNGL 100
Interior Wall	05	DRYWALL 100
Interior Floo	13	LVT/LAMNT 80
Interior Floo	14	CARPET 20
Air Condition	03	CENTRAL 100
Heating Type	04	AIR DUCTED 100
Bedrooms		4 100
Bathrooms		3 100
Frame	02	WOOD FRAME 100
Stories	2.	2. 100
Units		0 100
Occupancy	00	NONE 100
Quality	03	Quality Level 03
DOR CODE	0100	SINGLE FAMILY
MAP NUM		MKT AREA 03
NEIGHBORHOOD/LOC	3035.00	

AREA TYPE	TOTAL GROSS AREA	PCT OF BASE	TOT ADJ AREA	SUBAREA MARKET VALUE
BAS	1,678	100	1,678	185,772
DCK	60	10	6	664
DCK	370	10	37	4,096
FGR	698	55	384	42,512
FOP	55	30	16	1,772
FOP	237	30	71	7,861
FST	14	55	8	885
FST	48	55	26	2,878
FUS	1,482	100	1,482	164,073
SFB	128	80	102	11,292
TOTALS	5,742		4,251	470,631

MARKET ADJUSTMENTS

TYPE	MDL	EFF. AREA	TOT ADJ PTS	EFF. BASE RATE	REPL. COST NEW	AYB	EYB	ECON	FNCT		NORM	% COND
0900	01	4,251	97.3280	121.66	517,177	2004	2004	0	0	0	9.00	91.00

1 SNGL FAM – 100% - 2005 Heated Area: 3370 HX Base Yr 2005

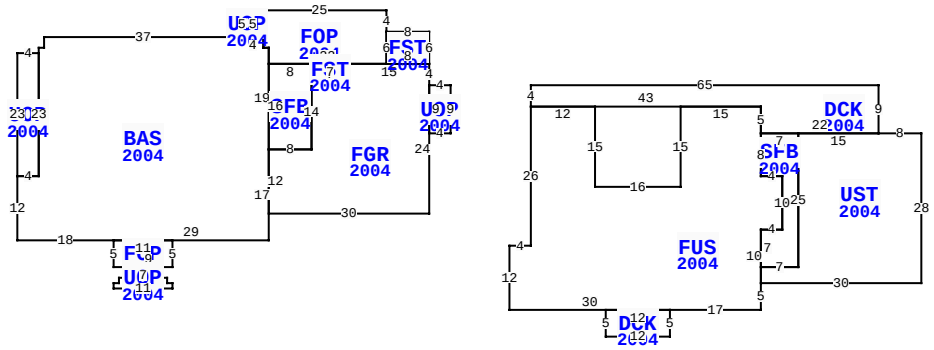

** This building has 16 Sub-Areas

5465 FLORENCE POINT DR, FERNANDINA BEACH

BLD DATE		LGL DATE	
XF DATE		LAND DATE	
INC DATE		AG DATE	

VALUATION SUMMARY

VALUATION BY		STANDARD
Tax Group: 8	Tax Dist:	
BUILDING MARKET VALUE		470,631
TOTAL MARKET OB/XF VALUE		38,590
TOTAL LAND VALUE - MARKET		450,000
TOTAL MARKET VALUE		959,221
SOH/AGL Deduction		383,829
ASSESSED VALUE		575,392
TOTAL EXEMPTION VALUE	HX HB	50,000
BASE TAXABLE VALUE		525,392
TOTAL JUST VALUE		959,221
NCON VALUE		0
INCOME VALUE		
PREVIOUS YEAR MKT VALUE		939,586

PERMIT NUM	DESCRIPTION	AMT	ISSUED
B0310780	NEW CONSTR	327,000	01/01/2003

SALES DATA

OFF RECORD Number	DATE	TYPE INST	Q / U	V / I	RSN CD	SALE PRICE
1572/0062	6/17/2008	WD	U	I	01	100
GRANTOR: PARISH TRUEMAN D						
GRANTEE: PAISH TRUEMAN D & C						
0870/1061	3/04/1999	WD	Q	V		125,000
GRANTOR: WILSON RICHARD A JR &						
GRANTEE: PARISH TRUEMAN D						

BUILDING NOTES

BUILDING DIMENSIONS

UOP=[YR=2004] W4 FGR=[YR=2004] N4 FST=[YR=2004] N6 W8 FOP=[YR=2004] N4 W25 UOP=[YR=2004] W2 S5 BAS=[YR=2004] W37 S2 W1 S1 UOP=[YR=2004] W4 S23 E4 N23 $ S23 W4 S12 E18 FOP=[YR=2004] S5 E2 UOP=[YR=2004] S2 W1 S1 W1 S1 E11 N1 W1 N1 W1 N2 W7 $ E9 N5 W11 $ E29 N17 SFB=[YR=2004] E8 N14 FST=[YR=2004] E7 N2 W7 S2 $ N2 W8 S16 $ N19 W1 N2 W4 $ E2 N5 $ S5 E2 S2 E1 S3 E22 N6 $ S6 E8 $ W15 S2 W7 S14 W8 S12 E30 N24 $ S9 E4 N9 $ PTR= E15 DCK=[YR=2004] E65 S9 UST=[YR=2004] E8 S28 W30 FUS=[YR=2004] S5 W17 DCK=[YR=2004] S5 W12 N5 E12 $ W30 N12 E4 N26 E12 S15 E16 N15 E15 S5 SFB=[YR=2004] E7 S25 W7 N7 E4 N10 W4 N8 $ S8 E4 S10 W4 S10 $ N3 E7 N25 E15 $ W22 N5 W43 N4 $ W15 $.

EXTRA FEATURES

L N	OB/XF CODE	DESCRIPTION	BLD	CAP	L	W	UNITS	UT	Adj R	ADJ UNIT PRICE	ORIG COND	YEAR ON	YEAR ACTUAL	Q	% COND	OB/XF MKT VALUE	NOTES
1	0855	CONC PAVER	0	100	0	0	2,117.00	SF	10.00	10.00	100	2004	2004	3	84	17,783	
2	0410	ELEVATOR	0	100	0	0	1.00	UT	10,000.00	10,000.00	100	2004	2004	3	100	10,000	
3	0810	CONCRETE A	0	100	0	0	410.00	SF	6.50	6.50	100	2004	2004	3	84	2,239	
4	0861	POOL GUNIT	0	100	0	0	280.00	SF	85.00	85.00	100	2004	2004	3	36	8,568	

LAND DESCRIPTION

TOTAL OB/XF 38,590

L N	USE CODE	CLS	LAND USE DESCRIPTION	CAP	R D	LOC ZONE	FRONT	DEPTH	TOT LND UTS	UNIT TYPE	D T	DPTH FACT	% COND	TOT ADJ	UNIT PRICE	ADJ UNIT PRICE	LAND VALUE	OTHER ADJUSTMENTS AND NOTES	YEAR	DENSITY	DECL	FRZ	YR	CONSRV
1	000116	C	SFR MARSH	100	0003	RSF-1	100.00	106.00	100.00	FF		1.00	1.00	1.00	4,500.00	4,500.00	450,000							

REVIEW DATE 01/31/2024 BY KBA Total Acres: 0.00 Total Land Value: 450,000 Market: 0 Agricultural: 0 Common: 450,000 PRINTED 08/06/2024 BY SYS