LOT 5
IN OR 724 PG 1598
FLORENCE POINT PB 4/109 & 110

FINOCCHIO FRANK S & CAROLYN B
5341 FLORENCE POINT DRIVE
FERNANDINA BEACH, FL 32034

2024

00-00-30-0250-0005-0000

BUILDING CHARACTERISTICS

ELEMENT	CD	CONSTRUCTION
Exterior Wall	12	CEDAR 100
Roof Structur	03	GABLE/HIP 100
Roof Cover	03	COMP SHNGL 100
Interior Wall	05	DRYWALL 100
Interior Floo	14	CARPET 70
Interior Floo	11	CLAY TILE 30
Air Condition	03	CENTRAL 100
Heating Type	04	AIR DUCTED 100
Bedrooms		3 100
Bathrooms		2 100
Frame	02	WOOD FRAME 100
Stories	2.	2. 100
Units		0 100
BUD8 Adjustme	05	DIST 1A 100
Occupancy	00	NONE 100
Quality	03	Quality Level 03
DOR CODE	0100	SINGLE FAMILY
MAP NUM		MKT AREA 03
NEIGHBORHOOD/LOC	3035.00	

AREA TYPE	TOTAL GROSS AREA	PCT OF BASE	TOT ADJ AREA	SUBAREA MARKET VALUE
BAS	1,301	100	1,301	149,784
DCK	360	10	36	4,145
FEP	112	80	90	10,362
FEP	112	80	90	10,362
FGR	483	55	266	30,624
FOP	25	30	8	921
FUS	698	100	698	80,360
PTO	25	5	1	115
TOTALS	3,116		2,490	286,673

MARKET ADJUSTMENTS

TYPE	MDL	EFF. AREA	TOT ADJ PTS	EFF. BASE RATE	REPL. COST NEW	AYB	EYB	ECON	FNCT		NORM	% COND
0900	01	2,490	110.3040	137.88	343,321	1986	1990	0	0	0	16.50	83.50

1 SNGL FAM – 100% - 2023 Heated Area: 1999 HX Base Yr

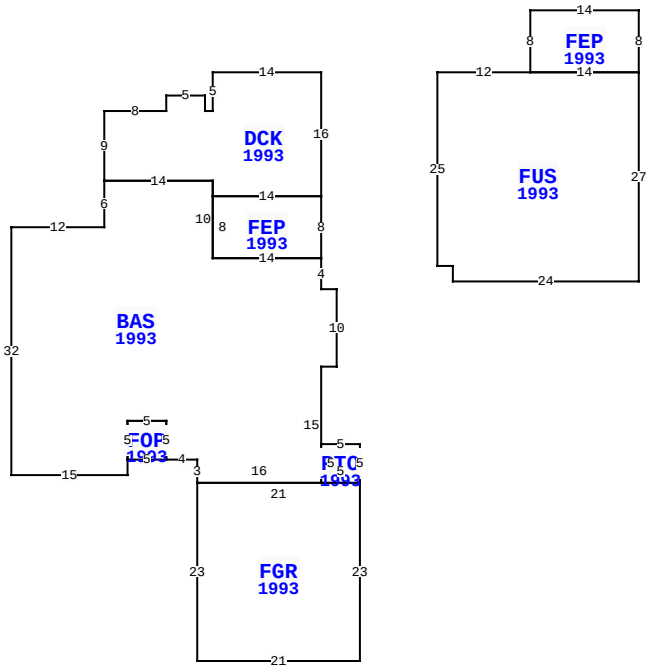

5341 FLORENCE POINT DR, FERNANDINA BEACH

BLD DATE		LGL DATE	
XF DATE		LAND DATE	06/18/2024 MLU
INC DATE		AG DATE	

NASSAU COUNTY PROPERTY

PAGE 1 of 1 8

VALUATION SUMMARY

VALUATION BY		STANDARD
Tax Group: 8	Tax Dist:	
BUILDING MARKET VALUE		286,673
TOTAL MARKET OB/XF VALUE		4,488
TOTAL LAND VALUE - MARKET		350,000
TOTAL MARKET VALUE		641,161
SOH/AGL Deduction		45,115
ASSESSED VALUE		596,046
TOTAL EXEMPTION VALUE	13	596,046
BASE TAXABLE VALUE		0
TOTAL JUST VALUE		641,161
NCON VALUE		0
INCOME VALUE		
PREVIOUS YEAR MKT VALUE		578,685

PERMIT NUM	DESCRIPTION	AMT	ISSUED
BP 3405	N/A	71,594	06/06/1986

SALES DATA

OFF RECORD Number	DATE	TYPE INST	Q U	V I	RSN CD	SALE PRICE
0724/1598	3/02/1995	WD	Q	I		129,000
GRANTOR: TODD ROBERT P & KERRI						
GRANTEE: FINOCCHIO FRANK & C						
0490/0881	6/01/1986	WD	U	V		23,000
GRANTOR:						
GRANTEE:						

BUILDING NOTES

BUILDING DIMENSIONS

DCK=[YR=1993] W14 S5 W1 N2 W5 S2 W8 S9 BAS=[YR=1993] S6 W12 S32 E15 N2 FOP=[YR=1993] E5 N5 W5 S5 $ N5 E5 S5 E4 S3 FGR=[YR=1993] S23 E21 N23 PTO=[YR=1993] N5 W5 S5 E5 $ W21 $ E16 N15 E2 N10 W2 N4 FEP=[YR=1993] N8 W14 S8 E14 $ W14 N10 W14 $ E14 S2 E14 N16 $ PTR= E15 FUS=[YR=1993] E12 FEP=[YR=1993] N8 E14 S8 W14 $ E14 S27 W24 N2 W2 N25 $ W15 $.

EXTRA FEATURES

LN	OB/XF CODE	DESCRIPTION	BLD	CAP	L	W	UNITS	UT	Adj R	ADJ UNIT PRICE	ORIG COND	YEAR ON	YEAR ACTUAL	Q	% COND	OB/XF MKT VALUE	NOTES
1	0500	FP-PRE FAB	0	100	0	0	1.00	UT	3,500.00	3,500.00	100	1986	1986	3	60	2,100	
2	0812	CONCRETE C	0	100	53	17	901.00	SF	4.00	4.00	100	1986	1986	3	49.5	1,784	
3	0812	CONCRETE C	0	100	41	3	123.00	SF	4.00	4.00	100	1986	1986	3	49.5	244	
4	1242	WD DECK A	0	100	0	0	116.00	SF	10.00	10.00	100	2007	2007	3	31	360	

LAND DESCRIPTION

TOTAL OB/XF 4,488

LN	USE CODE	CLS	LAND USE DESCRIPTION	CAP	RD	LOC ZONE	FRONT	DEPTH	TOT LND UTS	UNIT TYPE	DT	DPTH FACT	% COND	TOT ADJ	UNIT PRICE	ADJ UNIT PRICE	LAND VALUE	OTHER ADJUSTMENTS AND NOTES	YEAR	DENSITY	DECL	FRZ	YR	CONSRV
1	000100	C	SFR	100		RSF-1	0.00	0.00	1.00	LT		1.00	1.00	1.00	350,000.00	350,000.00	350,000							

REVIEW DATE 01/31/2024 BY KBA Total Acres: 0.00 Total Land Value: 350,000 Market: 0 Agricultural: 0 Common: 350,000 PRINTED 08/06/2024 BY SYS