LOT 63
EGANS BLUFF NORTH PB 5/272

GILES GEORGETTE L/E/
2705 BENZ PLACE
FERNANDINA BEACH, FL 32034

2024

00-00-30-021N-0063-0000

BUILDING CHARACTERISTICS

ELEMENT	CD	CONSTRUCTION
Exterior Wall	05	AVERAGE 90
Exterior Wall	20	FACE BRICK 10
Roof Structur	03	GABLE/HIP 100
Roof Cover	03	COMP SHNGL 100
Interior Wall	05	DRYWALL 100
Interior Floo	14	CARPET 80
Interior Floo	08	SHT VINYL 20
Air Condition	03	CENTRAL 100
Heating Type	04	AIR DUCTED 100
Bedrooms		3 100
Bathrooms		2 100
Frame	02	WOOD FRAME 100
Stories	1.	1. 100
Units		0 100
Occupancy	00	NONE 100
Quality	06	Quality Level 06
DOR CODE	0100	SINGLE FAMILY
MAP NUM		MKT AREA 02
NEIGHBORHOOD/LOC	2025.00	

AREA TYPE	TOTAL GROSS AREA	PCT OF BASE	TOT ADJ AREA	SUBAREA MARKET VALUE
BAS	1,777	100	1,777	222,544
FGR	486	55	267	33,438
FOP	72	30	22	2,756
FSP	73	40	29	3,632
USP	290	30	87	10,895
TOTALS	2,698		2,182	273,264

MARKET ADJUSTMENTS

TYPE	MDL	EFF. AREA	TOT ADJ PTS	EFF. BASE RATE	REPL. COST NEW	AYB	EYB	ECON	FNCT		NORM	% COND
0900	01	2,182	119.8001	149.75	326,754	1990	1990	0	0	0	16.37	83.63

1 SNGL FAM – 100% - 1993 Heated Area: 1777 HX Base Yr 1993

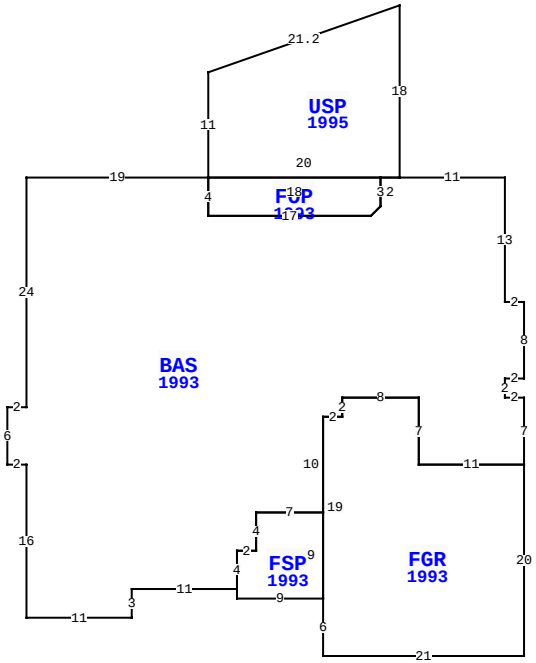

2705 BENZ PL, FERNANDINA BEACH

BLD DATE		LGL DATE	
XF DATE		LAND DATE	
INC DATE		AG DATE	

NASSAU COUNTY PROPERTY

VALUATION SUMMARY

VALUATION BY		STANDARD
Tax Group: 8	Tax Dist:	
BUILDING MARKET VALUE		273,264
TOTAL MARKET OB/XF VALUE		12,726
TOTAL LAND VALUE - MARKET		180,000
TOTAL MARKET VALUE		465,990
SOH/AGL Deduction		292,201
ASSESSED VALUE		173,789
TOTAL EXEMPTION VALUE	HX HB	50,000
BASE TAXABLE VALUE		123,789
TOTAL JUST VALUE		465,990
NCON VALUE		0
INCOME VALUE		
PREVIOUS YEAR MKT VALUE		453,394

PERMIT NUM	DESCRIPTION	AMT	ISSUED
B1226478	REPAIR/RRF	9,692	10/01/2012
B00973	XFOB	5,142	05/01/1994
B00878	SWIM POOL	11,100	03/01/1994
03315	H/AC	1,900	02/27/1990
6477	NEW CONSTR	1,600	02/08/1990
3804	NEW CONSTR	1,500	02/07/1990

SALES DATA

OFF RECORD Number	DATE	TYPE INST	Q / U	V / I	RSN CD	SALE PRICE
2705/1968	3/04/2024	QC	U	I	11	100
GRANTOR: GILES THEODORE R JR &						
GRANTEE: PLANTE IDA M						
2685/922	12/12/2023	QC	U	I	11	100
GRANTOR: GILES THEODORE R JR &						
GRANTEE: PLANT IDA M						

BUILDING NOTES

BUILDING DIMENSIONS

BAS=[YR=1993] W11 USP=[YR=1995] N18 L20 D7 S11
FOP=[YR=1993] S4 E17 U1 R1 N3 W18$ E20$ W2 S3 L1 D1 W17
N4 W19 S24 W2 S6 E2 S16E11 N3 E11 FSP=[YR=1993] S1 E9
FGR=[YR=1993] S6 E21 N20 W11 N7 W8 S2 W2 S19 $ N9 W7 S4 W2 S4
$ N4 E2 N4 E7 N10 E2 N2 E8 S7 E11 N7 W2 N2 E2 N8 W2 N13 $.

EXTRA FEATURES

LN	OB/XF CODE	DESCRIPTION	BLD	CAP	L	W	UNITS	UT	Adj R	ADJ UNIT PRICE	ORIG COND	YEAR ON	YEAR ACTUAL	Q	% COND	OB/XF MKT VALUE	NOTES
1	0500	FP-PRE FAB	0	100	0	0	1.00	UT	3,500.00	3,500.00	100	1990	1990	3	68	2,380	
2	0812	CONCRETE C	0	100	0	0	1,107.00	SF	4.00	4.00	100	1990	1990	3	59.5	2,635	
3	0861	POOL GUNIT	0	100	0	0	297.00	SF	85.00	85.00	100	1994	1994	3	20	5,049	
4	0845	KOOL DECK	0	100	0	0	153.00	SF	7.25	7.25	100	1994	1994	3	68	754	
5	0910	SCRN RM L	0	100	0	0	508.00	SF	15.00	15.00	100	1994	1994	3	20	1,524	
6	0940	SHEDS/PORT	0	100	8	8	64.00	SF	30.00	30.00	100	1999	1999	3	20	384	

LAND DESCRIPTION

TOTAL OB/XF 12,726

LN	USE CODE	CLS	LAND USE DESCRIPTION	CAP	RD	LOC ZONE	FRONT	DEPTH	TOT LND UTS	UNIT TYPE	DT	DPTH FACT	% COND	TOT ADJ	UNIT PRICE	ADJ UNIT PRICE	LAND VALUE	OTHER ADJUSTMENTS AND NOTES	YEAR	DENSITY	DECL	FRZ	YR	CONSRV
1	000100	C	SFR	100	0003	RSF-2	0.00	0.00	1.00	LT		1.00	1.00	1.00	180,000.00	180,000.00	180,000							

REVIEW DATE 01/31/2024 BY KBA Total Acres: 0.00 Total Land Value: 180,000 Market: 0 Agricultural: 0 Common: 180,000 PRINTED 08/06/2024 BY SYS