LOT 60
IN OR 2327/1520
EGANS LANDING PB 5/387-387B

MACWITHEY RICHARD & THERESA
2932 ROBERT OLIVER AVE
FERNANDINA BEACH, FL 32034

2024

00-00-30-021L-0060-0000

NASSAU COUNTY PROPERTY

BUILDING CHARACTERISTICS

ELEMENT	CD	CONSTRUCTION
Exterior Wall	16	WD FR STUC 100
Roof Structur	03	GABLE/HIP 100
Roof Cover	03	COMP SHNGL 100
Interior Wall	05	DRYWALL 100
Interior Floo	14	CARPET 60
Interior Floo	11	CLAY TILE 40
Air Condition	03	CENTRAL 100
Heating Type	04	AIR DUCTED 100
Bedrooms		4 100
Bathrooms		2.5 100
Frame	02	WOOD FRAME 100
Stories	1.5	1.5 100
Units		0 100
Occupancy	00	NONE 100
Quality	06	Quality Level 06
DOR CODE	0100	SINGLE FAMILY
MAP NUM		MKT AREA 01
NEIGHBORHOOD/LOC	1076.00	

AREA TYPE	TOTAL GROSS AREA	PCT OF BASE	TOT ADJ AREA	SUBAREA MARKET VALUE
BAS	1,700	100	1,700	245,147
FEP	230	80	184	26,533
FGR	504	55	277	39,944
FOP	24	30	7	1,009
FOP	30	30	9	1,297
FST	24	55	13	1,875
FUS	309	100	309	44,559
TOTALS	2,821		2,499	360,365

MARKET ADJUSTMENTS

TYPE	MDL	EFF. AREA	TOT ADJ PTS	EFF. BASE RATE	REPL. COST NEW	AYB	EYB	ECON	FNCT		NORM	% COND
0900	01	2,499	126.0768	157.60	393,842	1996	2006	0	0	0	8.50	91.50

1 SNGL FAM – 100% - 2020 Heated Area: 2009 HX Base Yr 2020

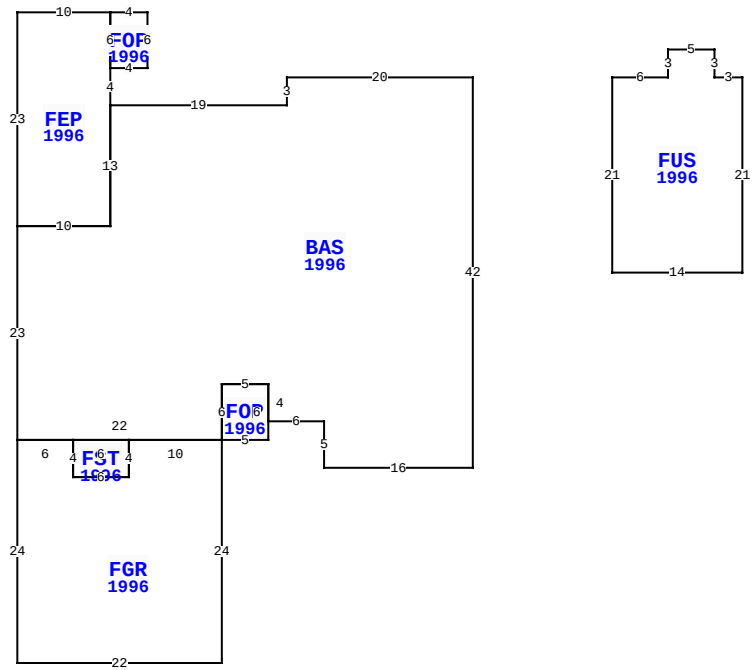

2932 ROBERT OLIVER AVE, FERNANDINA BEACH

BLD DATE		LGL DATE	
XF DATE		LAND DATE	03/13/2024 MLU
INC DATE		AG DATE	

VALUATION SUMMARY

VALUATION BY		STANDARD
Tax Group: 2	Tax Dist:	
BUILDING MARKET VALUE		360,365
TOTAL MARKET OB/XF VALUE		11,306
TOTAL LAND VALUE - MARKET		250,000
TOTAL MARKET VALUE		621,671
SOH/AGL Deduction		252,801
ASSESSED VALUE		368,870
TOTAL EXEMPTION VALUE	HX HB	50,000
BASE TAXABLE VALUE		318,870
TOTAL JUST VALUE		621,671
NCON VALUE		0
INCOME VALUE		
PREVIOUS YEAR MKT VALUE		535,617

PERMIT NUM	DESCRIPTION	AMT	ISSUED
20100204	H/AC	5,000	02/02/2010
B012465	REMODEL	5,000	11/21/2001
B969797	NEW CONSTR	100,496	05/03/1996

SALES DATA

OFF RECORD Number	DATE	TYPE INST	Q U	V I	RSN CD	SALE PRICE
2327/1520	12/23/2019	WD	Q	I	01	480,000
GRANTOR: SMITH RICHARD A & JUL						
GRANTEE: MACWITHEY RICHARD &						
0769/1965	9/03/1996	WD	Q	I		155,500
GRANTOR: ALMAND DORIS J						
GRANTEE: SMITH RICHARD A & J						

BUILDING NOTES

BUILDING DIMENSIONS

BAS=[YR=1996] W20 S3 W19 FEP=[YR=1996] N4 FOP=[YR=1996] E4 N6 W4 S6$ N6 W10 S23 E10 N13$ S13 W10 S23 FGR=[YR=1996] S24 E22 N24 FOP=[YR=1996] E5 N6 W5 S6$ W10 FST=[YR=1996] W6 S4 E6 N4$ S4 W6 N4 W6$ E22 N6 E5 S4 E6 S5 E16 N42$ PTR=E15 FUS=[YR=1996] E6 N3 E5 S3 E3 S21 W14 N21$ W15$.

EXTRA FEATURES

LN	OB/XF CODE	DESCRIPTION	BLD	CAP	L	W	UNITS	UT	Adj R	ADJ UNIT PRICE	ORIG COND	YEAR ON	YEAR ACTUAL	Q	% COND	OB/XF MKT VALUE	NOTES
1	0500	FP-PRE FAB	0	100	0	0	1.00	UT	3,500.00	3,500.00	100	1996	1996	3	79	2,765	
2	0812	CONCRETE C	0	100	0	0	1,340.00	SF	4.00	4.00	100	1996	1996	3	72	3,859	
3	0858	SCULP CONC	0	100	0	0	24.00	SF	13.00	13.00	100	1996	1996	3	91	284	
4	0810	CONCRETE A	0	100	0	0	9.00	SF	6.50	6.50	100	1996	1996	3	72	42	
5	0858	SCULP CONC	0	100	0	0	349.00	SF	13.00	13.00	100	2004	2004	3	96	4,356	

LAND DESCRIPTION

TOTAL OB/XF 11,306

LN	USE CODE	CLS	LAND USE DESCRIPTION	CAP	RD	LOC ZONE	FRONT	DEPTH	TOT LND UTS	UNIT TYPE	DT	DPTH FACT	% COND	TOT ADJ	UNIT PRICE	ADJ UNIT PRICE	LAND VALUE	OTHER ADJUSTMENTS AND NOTES	YEAR	DENSITY	DECL	FRZ	YR	CONSRV
1	000100	C	SFR	100	0003	R-2	0.00	0.00	1.00	LT		1.00	1.00	1.00	250,000.00	250,000.00	250,000							

REVIEW DATE 03/25/2020 BY DJA Total Acres: 0.00 Total Land Value: 250,000 Market: 0 Agricultural: 0 Common: 250,000 PRINTED 08/06/2024 BY SYS