LOT 58
EGANS LANDING PB 5/387-387B

GARLAND KATHY W TRUST/GARLAND KATHY W TRUSTEE
2986 ROBERT OLIVER AV
FERNANDINA BEACH, FL 32034

2024

00-00-30-021L-0058-0000

NASSAU COUNTY PROPERTY

BUILDING CHARACTERISTICS

ELEMENT	CD	CONSTRUCTION
Exterior Wall	16	WD FR STUC 100
Roof Structur	03	GABLE/HIP 100
Roof Cover	03	COMP SHNGL 100
Interior Wall	05	DRYWALL 100
Interior Floo	14	CARPET 80
Interior Floo	11	CLAY TILE 20
Air Condition	03	CENTRAL 100
Heating Type	04	AIR DUCTED 100
Bedrooms		3 100
Bathrooms		2 100
Frame	02	WOOD FRAME 100
Stories	1.	1. 100
Units		0 100
Occupancy	00	NONE 100
Quality	06	Quality Level 06
DOR CODE	0100	SINGLE FAMILY
MAP NUM		MKT AREA 01
NEIGHBORHOOD/LOC	1076.00	

AREA TYPE	TOTAL GROSS AREA	PCT OF BASE	TOT ADJ AREA	SUBAREA MARKET VALUE
BAS	1,728	100	1,728	235,000
FGR	515	55	283	38,486
FOP	25	30	8	1,088
FSP	449	40	180	24,480
TOTALS	2,717		2,199	299,054

MARKET ADJUSTMENTS

TYPE	MDL	EFF. AREA	TOT ADJ PTS	EFF. BASE RATE	REPL. COST NEW	AYB	EYB	ECON	FNCT		NORM	% COND
0900	01	2,199	125.7732	157.22	345,727	1996	1996	0	0	0	13.50	86.50

1 SNGL FAM – 100% - 2014 Heated Area: 1728 HX Base Yr 2014

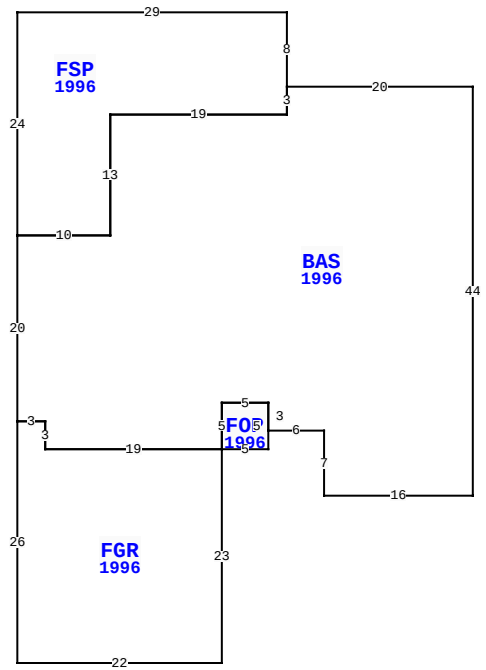

2986 ROBERT OLIVER AVE, FERNANDINA BEACH

BLD DATE		LGL DATE	
XF DATE		LAND DATE	03/13/2024 MLU
INC DATE		AG DATE	

VALUATION SUMMARY

VALUATION BY		STANDARD
Tax Group: 2	Tax Dist:	
BUILDING MARKET VALUE		299,054
TOTAL MARKET OB/XF VALUE		6,599
TOTAL LAND VALUE - MARKET		250,000
TOTAL MARKET VALUE		555,653
SOH/AGL Deduction		271,393
ASSESSED VALUE		284,260
TOTAL EXEMPTION VALUE	HX HB	50,000
BASE TAXABLE VALUE		234,260
TOTAL JUST VALUE		555,653
NCON VALUE		0
INCOME VALUE		
PREVIOUS YEAR MKT VALUE		472,432

PERMIT NUM	DESCRIPTION	AMT	ISSUED
20131462	FIXTURES	2,500	06/25/2013
20131386	REMODEL	1,900	06/19/2013
20131366	REPAIR/RRF	50,000	06/17/2013
20090223	H/AC	2,500	02/18/2009
B9610138	ADDITION	5,000	11/13/1996
B969891	NEW CONSTR	93,432	06/25/1996

SALES DATA

OFF RECORD Number	DATE	TYPE INST	Q / U	V / I	RSN CD	SALE PRICE
2704/1585	3/14/2024	WD	U	I	11	100
GRANTOR: GARLAND KATHY W						
GRANTEE: GARLAND KATHY W TRU						
1854/0247	4/26/2013	WD	Q	I	02	266,000
GRANTOR: WISE ROBERT MATTHEW T						
GRANTEE: GARLAND KATHY W						

BUILDING NOTES

BUILDING DIMENSIONS

BAS=[YR=1996] W20 FSP=[YR=1996] N8 W29 S24 E10 N13 E19 N3 $ S3 W19 S13 W10 S20 FGR=[YR=1996] S26 E22 N23 FOP=[YR=1996] E5 N5 W5 S5 $ W19 N3 W3 $ E3 S3 E19 N5 E5 S3 E6 S7 E16 N44 $.

EXTRA FEATURES

LN	OB/XF CODE	DESCRIPTION	BLD	CAP	L	W	UNITS	UT	Adj R	ADJ UNIT PRICE	ORIG COND	YEAR ON	YEAR ACTUAL	Q	% COND	OB/XF MKT VALUE	NOTES
1	0500	FP-PRE FAB	0	100	0	0	1.00	UT	3,500.00	3,500.00	100	1996	1996	3	79	2,765	
2	0812	CONCRETE C	0	100	0	0	1,279.00	SF	4.00	4.00	100	1996	1996	3	72	3,684	
3	0810	CONCRETE A	0	100	0	0	32.00	SF	6.50	6.50	100	1996	1996	3	72	150	

LAND DESCRIPTION

TOTAL OB/XF 6,599

LN	USE CODE	CLS	LAND USE DESCRIPTION	CAP	RD	LOC ZONE	FRONT	DEPTH	TOT LND UTS	UNIT TYPE	DT	DPTH FACT	% COND	TOT ADJ	UNIT PRICE	ADJ UNIT PRICE	LAND VALUE	OTHER ADJUSTMENTS AND NOTES	YEAR	DENSITY	DECL	FRZ	YR	CONSRV
1	000100	C	SFR	100	0003	R-2	0.00	0.00	1.00	LT		1.00	1.00	1.00	250,000.00	250,000.00	250,000							

REVIEW DATE 01/18/2024 BY KBA Total Acres: 0.00 Total Land Value: 250,000 Market: 0 Agricultural: 0 Common: 250,000 PRINTED 08/06/2024 BY SYS