LOT 23 IN OR 924/1642
EGANS LANDING PB 5/387-387B

HERTSLET BARRY S & SALLY K
2705 ROBERT OLIVER AVENUE
FERNANDINA BEACH, FL 32034

2024

00-00-30-021L-0023-0000

BUILDING CHARACTERISTICS

ELEMENT	CD	CONSTRUCTION
Exterior Wall	16	WD FR STUC 100
Roof Structur	03	GABLE/HIP 100
Roof Cover	03	COMP SHNGL 100
Interior Wall	05	DRYWALL 100
Interior Floo	14	CARPET 70
Interior Floo	11	CLAY TILE 30
Air Condition	03	CENTRAL 100
Heating Type	04	AIR DUCTED 100
Bedrooms		3 100
Bathrooms		2.5 100
Frame	02	WOOD FRAME 100
Stories	2.	2. 100
Units		0 100
Occupancy	00	NONE 100
Quality	06	Quality Level 06
DOR CODE	0100	SINGLE FAMILY
MAP NUM		MKT AREA 01
NEIGHBORHOOD/LOC	1076.00	

AREA TYPE	TOTAL GROSS AREA	PCT OF BASE	TOT ADJ AREA	SUBAREA MARKET VALUE
BAS	1,503	100	1,503	213,436
FGR	523	55	288	40,898
FOP	18	30	5	710
FSP	100	40	40	5,680
FUS	481	100	481	68,305
PTO	12	5	1	142
USP	208	30	62	8,805
TOTALS	2,845		2,380	337,977

MARKET ADJUSTMENTS

TYPE	MDL	EFF. AREA	TOT ADJ PTS	EFF. BASE RATE	REPL. COST NEW	AYB	EYB	ECON	FNCT		NORM	% COND
0900	01	2,380	128.3653	160.46	381,895	2000	2000	0	0	0	11.50	88.50

1 SNGL FAM – 100% - 2001 Heated Area: 1984 HX Base Yr 2001

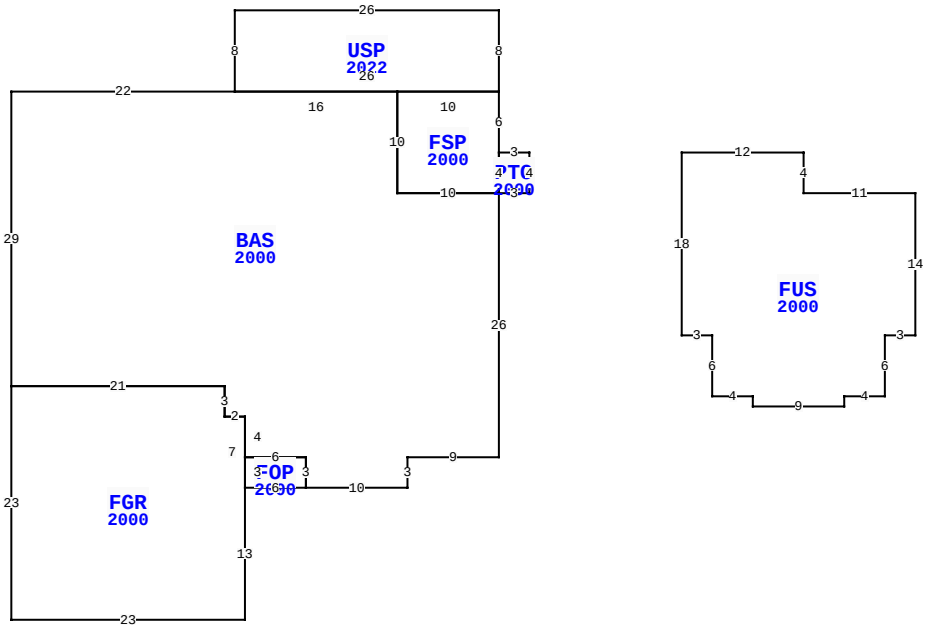

2705 ROBERT OLIVER AV, FERNANDINA BEACH

BLD DATE		LGL DATE	
XF DATE		LAND DATE	03/13/2024 MLU
INC DATE		AG DATE	

NASSAU COUNTY PROPERTY

PAGE 1 of 1 2

VALUATION SUMMARY

VALUATION BY		STANDARD
Tax Group: 2	Tax Dist:	
BUILDING MARKET VALUE		337,977
TOTAL MARKET OB/XF VALUE		7,543
TOTAL LAND VALUE - MARKET		237,500
TOTAL MARKET VALUE		583,020
SOH/AGL Deduction		299,102
ASSESSED VALUE		283,918
TOTAL EXEMPTION VALUE	HX HB	50,000
BASE TAXABLE VALUE		233,918
TOTAL JUST VALUE		583,020
NCON VALUE		0
INCOME VALUE		
PREVIOUS YEAR MKT VALUE		501,585

PERMIT NUM	DESCRIPTION	AMT	ISSUED
20111206	H/AC	8,663	07/25/2011
B0040799	ADDITION	9,000	04/26/2004
B990431	NEW CONSTR	205,623	05/13/1999

SALES DATA

OFF RECORD Number	DATE	TYPE INST	Q / U	V / I	RSN CD	SALE PRICE
0924/1642	3/20/2000	WD	Q	I		200,000
GRANTOR: ALMAND DORIS J						
GRANTEE: HERTSLET BARRY S &						
0759/1150	5/13/1996	QC	U	V	07	100
GRANTOR: ALMAND AMOS JR						
GRANTEE: ALMAND DORIS J						

BUILDING NOTES

BUILDING DIMENSIONS

PTO=[YR=2000] W3 FSP=[YR=2000] N6 USP=[YR=2022] N8 W26 S8
BAS=[YR=2000] W22 S29 FGR=[YR=2000] S23 E23 N13
FOP=[YR=2000] E6 N3 W6 S3 $N7 W2 N3 W21 $ E21 S3 E2 S4 E6S3
E10 N3 E9 N26 W10 N10 W16$ E26$ W10 S10 E10 N4$ S4 E3 N4 $
PTR= E15 FUS=[YR=2000] E12 S4 E11 S14 W3 S6 W4 S1 W9 N1 W4
N6 W3 N18 $ W15 $.

EXTRA FEATURES

L N	OB/XF CODE	DESCRIPTION	BLD	CAP	L	W	UNITS	UT	Adj R	ADJ UNIT PRICE	ORIG COND	YEAR ON	YEAR ACTUAL	Q	% COND	OB/XF MKT VALUE	NOTES
1	0500	FP-PRE FAB	0	100	0	0	1.00	UT	3,500.00	3,500.00	100	2000	2000	3	84	2,940	
2	0811	CONCRETE B	0	100	0	0	580.00	SF	5.20	5.20	100	2000	2000	3	79	2,383	
3	0810	CONCRETE A	0	100	20	3	60.00	SF	6.50	6.50	100	2000	2000	3	79	308	
4	0755	FSP	0	100	24	8	192.00	SF	20.00	20.00	100	2004	2004	3	22	845	
5	0810	CONCRETE A	0	100	12	8	96.00	SF	6.50	6.50	100	2004	2004	3	84	524	
6	0810	CONCRETE A	0	100	12	8	96.00	SF	6.50	6.50	100	2006	2006	3	87	543	

LAND DESCRIPTION

TOTAL OB/XF 7,543

L N	USE CODE	CLS	LAND USE DESCRIPTION	CAP	R D	LOC ZONE	FRONT	DEPTH	TOT LND UTS	UNIT TYPE	D T	DPTH FACT	% COND	TOT ADJ	UNIT PRICE	ADJ UNIT PRICE	LAND VALUE	OTHER ADJUSTMENTS AND NOTES	YEAR	DENSITY	DECL	FRZ	YR	CONSRV
1	000100	C	SFR	100	0003	R-2	0.00	0.00	1.00	LT		1.00	1.00	0.95	250,000.00	237,500.00	237,500							

REVIEW DATE 01/06/2023 BY TWA Total Acres: 0.00 Total Land Value: 237,500 Market: 0 Agricultural: 0 Common: 237,500 PRINTED 08/06/2024 BY SYS