LOT 20
IN OR 2033/1261
EGANS BLUFF #3 PB 5/243

LEMERY AMY L REVOCABLE TRUST/LEMERY AMY L TRUSTEE
2854 PARK SQUARE PLACE EAST
FERNANDINA BEACH, FL 32034

2024

00-00-30-021C-0020-0000

NASSAU COUNTY PROPERTY

BUILDING CHARACTERISTICS

ELEMENT	CD	CONSTRUCTION
Exterior Wall	20	FACE BRICK 100
Roof Structur	03	GABLE/HIP 100
Roof Cover	03	COMP SHNGL 100
Interior Wall	05	DRYWALL 100
Interior Floo	11	CLAY TILE 60
Interior Floo	09	PINE WOOD 40
Air Condition	03	CENTRAL 100
Heating Type	04	AIR DUCTED 100
Bedrooms		4 100
Bathrooms		4 100
Frame	02	WOOD FRAME 100
Stories	1.	1. 100
Units		0 100
Occupancy	00	NONE 100
Quality	06	Quality Level 06
DOR CODE	0100	SINGLE FAMILY
MAP NUM		MKT AREA 02
NEIGHBORHOOD/LOC	2031.00	

AREA TYPE	TOTAL GROSS AREA	PCT OF BASE	TOT ADJ AREA	SUBAREA MARKET VALUE
BAS	2,274	100	2,274	299,039
BAS	261	100	261	34,322
FGR	514	55	283	37,215
FOP	75	30	22	2,893
FOP	153	30	46	6,049
FOP	225	30	68	8,942
FST	169	55	93	12,230
FUS	524	100	524	68,908
TOTALS	4,195		3,571	469,599

MARKET ADJUSTMENTS

TYPE	MDL	EFF. AREA	TOT ADJ PTS	EFF. BASE RATE	REPL. COST NEW	AYB	EYB	ECON	FNCT		NORM	% COND
0900	01	3,571	133.1700	166.46	594,429	1991	1995	0	0	0	21.00	79.00

1 SNGL FAM – 100% - 1992 Heated Area: 3059 HX Base Yr 1992

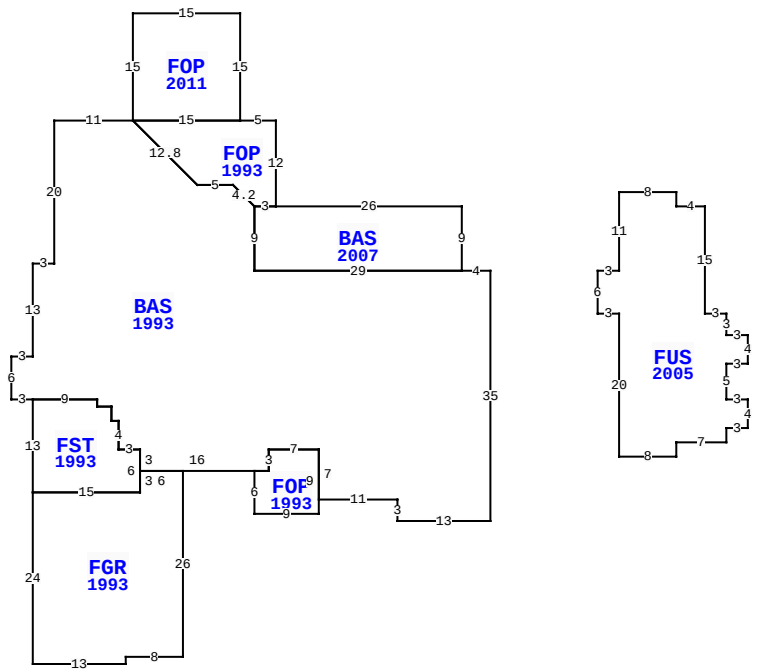

2854 E PARK SQUARE PL, FERNANDINA BEACH

BLD DATE		LGL DATE	
XF DATE		LAND DATE	04/18/2024 MLU
INC DATE		AG DATE	

VALUATION SUMMARY

VALUATION BY		STANDARD
Tax Group: 8	Tax Dist:	
BUILDING MARKET VALUE		469,599
TOTAL MARKET OB/XF VALUE		18,530
TOTAL LAND VALUE - MARKET		300,000
TOTAL MARKET VALUE		788,129
SOH/AGL Deduction		414,151
ASSESSED VALUE		373,978
TOTAL EXEMPTION VALUE	HX HB WX	55,000
BASE TAXABLE VALUE		318,978
TOTAL JUST VALUE		788,129
NCON VALUE		0
INCOME VALUE		
PREVIOUS YEAR MKT VALUE		739,529

PERMIT NUM	DESCRIPTION	AMT	ISSUED
R035091	REPAIR/RRF	1,500	05/01/2003
B0311196	ADDITION	0	05/01/2003
7202	NEW CONSTR	88,550	05/02/1991

SALES DATA

OFF RECORD Number	DATE	TYPE INST	Q / U	V / I	RSN CD	SALE PRICE
2033/1261	3/09/2016	WD	U	I	11	100
GRANTOR: LEMERY AMY L						
GRANTEE: AMY L LEMERY REVOCA						
0767/1858	8/08/1996	QC	U	I	06	76,600
GRANTOR: LEMERY AMY L F/K/A AM						
GRANTEE: LEMERY AMY L & WAYN						

BUILDING NOTES

BUILDING DIMENSIONS

BAS=[YR=1993] W4 BAS=[YR=2007] N9 W26 FOP=[YR=1993] N12 W5 FOP=[YR=2011] N15 W15 S15 E15$ W15 D9 R9 E5 D3 R3 E3 $ W3 S9 E29$ W29 N9 L3 U3 W5 U9 L9 W11 S20 W3 S13 W3 S6 E3 FST=[YR=1993] S13 FGR=[YR=1993] S24 E13 N1 E8 N26W6 S3 W15 $ E15 N6 W3 N4 W1 N2W2 N1 W9 $ E9 S1 E2 S2 E1 S4 E3 S3 E16 FOP=[YR=1993] S6 E9 N9 W7S3 W2 $ E2 N3 E7 S7 E11 S3 E13N35 $ PTR= E15 FUS=[YR=2005] E3 N11E8 S2 E4 S15 E3 S3 E3 S4 W3 S5E3 S4 W3 S2 W7 S2 W8 N20 W3 N6$ W15 $.

EXTRA FEATURES

LN	OB/XF CODE	DESCRIPTION	BLD	CAP	L	W	UNITS	UT	Adj R	ADJ UNIT PRICE	ORIG COND	YEAR ON	YEAR ACTUAL	Q	% COND	OB/XF MKT VALUE	NOTES
1	0504	FP-ELECTRI	0	100	0	0	1.00	UT	2,000.00	2,000.00	100	1991	1991	3	70	1,400	
2	0812	CONCRETE C	0	100	0	0	1,414.00	SF	4.00	4.00	100	1991	1991	3	62	3,507	
3	0825	BRICK	0	100	0	0	10.00	SF	12.50	12.50	100	1991	1991	3	87	109	
4	0471	VINYL FNC	0	100	0	0	77.00	LF	32.00	32.00	100	2005	2005	3	66	1,626	
5	0470	VNYL GATE	0	100	0	0	2.00	UT	300.00	300.00	100	2005	2005	3	66	396	
6	0940	SHEDS/PORT	0	100	14	8	112.00	SF	30.00	30.00	100	2006	2006	3	27	907	
7	0855	CONC PAVER	0	100	0	0	871.00	SF	10.00	10.00	100	2007	2007	3	88	7,665	
8	1127	BRICK 8"	0	100	0	0	132.00	SF	11.00	11.00	100	2007	2007	3	97	1,408	
9	1242	WD DECK A	0	100	0	0	336.00	SF	10.00	10.00	100	2010	2010	3	45	1,512	

LAND DESCRIPTION

TOTAL OB/XF 18,530

LN	USE CODE	CLS	LAND USE DESCRIPTION	CAP	RD	LOC ZONE	FRONT	DEPTH	TOT LND UTS	UNIT TYPE	DT	DPTH FACT	% COND	TOT ADJ	UNIT PRICE	ADJ UNIT PRICE	LAND VALUE	OTHER ADJUSTMENTS AND NOTES	YEAR	DENSITY	DECL	FRZ	YR	CONSRV
1	000100	C	SFR	100		RSF-2	0.00	0.00	1.00	LT		1.00	1.00	1.20	250,000.00	300,000.00	300,000							

REVIEW DATE 01/14/2021 BY KBA Total Acres: 0.00 Total Land Value: 300,000 Market: 0 Agricultural: 0 Common: 300,000 PRINTED 08/06/2024 BY SYS