LOT 66
IN OR 577 PG 783
EGANS BLUFF #2 PB 5/102

SHEARER STEPHEN L & SUSAN L
3109 BIG PINE DR
FERNANDINA BEACH, FL 32034

2024

00-00-30-021B-0066-0000

BUILDING CHARACTERISTICS

ELEMENT	CD	CONSTRUCTION
Exterior Wall	20	FACE BRICK 100
Roof Structur	03	GABLE/HIP 100
Roof Cover	03	COMP SHNGL 100
Interior Wall	05	DRYWALL 100
Interior Floo	14	CARPET 80
Interior Floo	11	CLAY TILE 20
Air Condition	03	CENTRAL 100
Heating Type	04	AIR DUCTED 100
Bedrooms		4 100
Bathrooms		2 100
Frame	02	WOOD FRAME 100
Stories	1.	1. 100
Units		0 100
Occupancy	00	NONE 100
Quality	06	Quality Level 06
DOR CODE	0100	SINGLE FAMILY
MAP NUM		MKT AREA 02
NEIGHBORHOOD/LOC	2031.00	

AREA TYPE	TOTAL GROSS AREA	PCT OF BASE	TOT ADJ AREA	SUBAREA MARKET VALUE
BAS	2,066	100	2,066	240,199
FGR	528	55	290	33,716
FOP	8	30	2	233
PTO	160	5	8	930
TOTALS	2,762		2,366	275,078

MARKET ADJUSTMENTS

TYPE	MDL	EFF. AREA	TOT ADJ PTS	EFF. BASE RATE	REPL. COST NEW	AYB	EYB	ECON	FNCT		NORM	% COND
0900	01	2,366	123.5192	154.40	365,310	1989	1989	0	0	0	24.70	75.30

1 SNGL FAM – 100% - 2009 Heated Area: 2066 HX Base Yr 2009

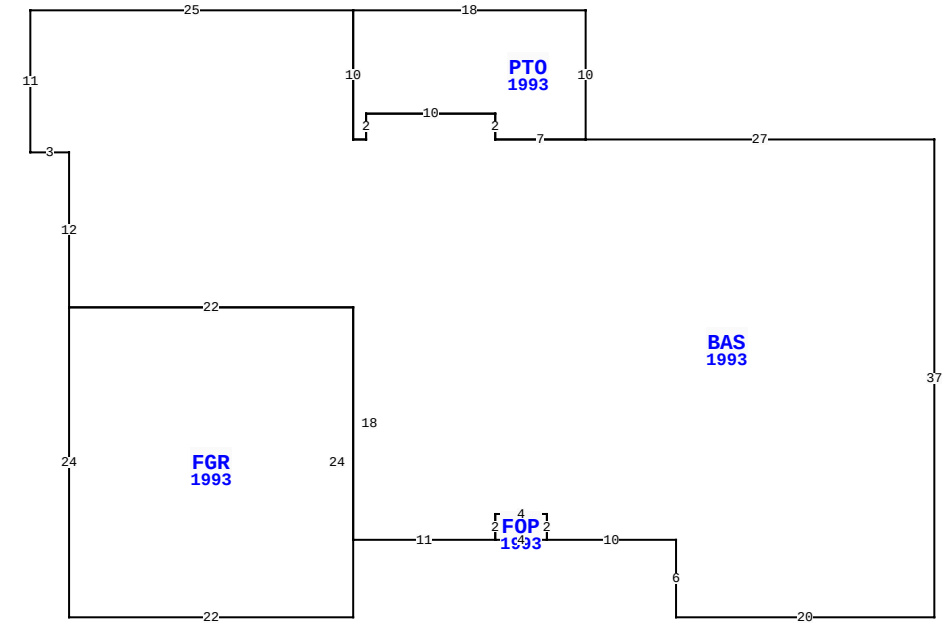

BLD DATE		LGL DATE	
XF DATE		LAND DATE	03/13/2024 MLU
INC DATE		AG DATE	

3109 BIG PINE DR, FERNANDINA BEACH

NASSAU COUNTY PROPERTY

PAGE 1 of 1 8

VALUATION SUMMARY

VALUATION BY		STANDARD
Tax Group: 8	Tax Dist:	
BUILDING MARKET VALUE		275,078
TOTAL MARKET OB/XF VALUE		5,737
TOTAL LAND VALUE - MARKET		250,000
TOTAL MARKET VALUE		530,815
SOH/AGL Deduction		280,993
ASSESSED VALUE		249,822
TOTAL EXEMPTION VALUE	HX HB	50,000
BASE TAXABLE VALUE		199,822
TOTAL JUST VALUE		530,815
NCON VALUE		0
INCOME VALUE		
PREVIOUS YEAR MKT VALUE		449,191

PERMIT NUM	DESCRIPTION	AMT	ISSUED
B23569	REPAIR/RRF	1,752	05/01/2010
5691	NEW CONSTR	80,798	05/02/1989

SALES DATA

OFF RECORD Number	DATE	TYPE INST	Q U	V I	RSN CD	SALE PRICE
0577/0783	8/24/1989	WD	U	I	07	100
GRANTOR: ALMAND AMOS F JR						
GRANTEE: SHEARER STEPHEN & S						
0576/0383	8/04/1989	WD	Q	I		154,900
GRANTOR: ALMAND AMOS F JR						
GRANTEE: SHEARER STEPHEN L						

BUILDING NOTES

BUILDING DIMENSIONS

BAS=[YR=1993] W27 PTO=[YR=1993] N10 W18 S10 E1 N2 E10 S2 E7 $ W7 N2 W10 S2 W1 N10 W25 S11 E3 S12 FGR=[YR=1993] S24 E22 N24 W22 $ E22 S18 E11 FOP=[YR=1993] E4 N2 W4 S2 $ N2 E4 S2 E10 S6 E20 N37 $.

EXTRA FEATURES

LN	OB/XF CODE	DESCRIPTION	BLD	CAP	L	W	UNITS	UT	Adj R	ADJ UNIT PRICE	ORIG COND	YEAR ON	YEAR ACTUAL	Q	% COND	OB/XF MKT VALUE	NOTES
1	0500	FP-PRE FAB	0	100	0	0	1.00	UT	3,500.00	3,500.00	100	1989	1989	3	66	2,310	
2	0812	CONCRETE C	0	100	0	0	1,503.00	SF	4.00	4.00	100	1989	1989	3	57	3,427	

LAND DESCRIPTION

TOTAL OB/XF 5,737

LN	USE CODE	CLS	LAND USE DESCRIPTION	CAP	RD	LOC ZONE	FRONT	DEPTH	TOT LND UTS	UNIT TYPE	DT	DPTH FACT	% COND	TOT ADJ	UNIT PRICE	ADJ UNIT PRICE	LAND VALUE	OTHER ADJUSTMENTS AND NOTES	YEAR	DENSITY	DECL	FRZ	YR	CONSRV
1	000100	C	SFR	100		RSF-2	0.00	0.00	1.00	LT		1.00	1.00	1.00	250,000.00	250,000.00	250,000							

REVIEW DATE 08/22/2019 BY DJA Total Acres: 0.00 Total Land Value: 250,000 Market: 0 Agricultural: 0 Common: 250,000 PRINTED 08/06/2024 BY SYS