LOT 29 IN OR 987/1469
AZALEA POINTE PB 6/164-165

ALTERIO HARRY A & LINDA C
9518 SPRING BLOSSOM COURT
FERNANDINA BEACH, FL 32034-1817

2024

00-00-30-0131-0029-0000

NASSAU COUNTY PROPERTY

BUILDING CHARACTERISTICS

ELEMENT	CD	CONSTRUCTION
Exterior Wall	16	WD FR STUC 100
Roof Structur	03	GABLE/HIP 100
Roof Cover	03	COMP SHNGL 100
Interior Wall	05	DRYWALL 100
Interior Floo	14	CARPET 70
Interior Floo	11	CLAY TILE 30
Air Condition	03	CENTRAL 100
Heating Type	04	AIR DUCTED 100
Bedrooms		3 100
Bathrooms		2.5 100
Frame	02	WOOD FRAME 100
Stories	1.	1. 100
Units		0 100
Occupancy	00	NONE 100
Quality	06	Quality Level 06

DOR CODE 0100 SINGLE FAMILY
MAP NUM | MKT AREA 03
NEIGHBORHOOD/LOC 3030.00

AREA TYPE	TOTAL GROSS AREA	PCT OF BASE	TOT ADJ AREA	SUBAREA MARKET VALUE
BAS	2,330	100	2,330	322,020
FGR	468	55	257	35,519
FOP	81	30	24	3,317
FOP	281	30	84	11,609
PTO	6	5	0	0
PTO	119	5	6	830
TOTALS	3,285		2,701	373,294

MARKET ADJUSTMENTS

TYPE	MDL	EFF. AREA	TOT ADJ PTS	EFF. BASE RATE	REPL. COST NEW	AYB	EYB	ECON	FNCT		NORM	% COND
0900	01	2,701	123.5376	154.42	417,088	2002	2002	0	0	0	10.50	89.50

1 SNGL FAM – 100% - 2005 Heated Area: 2330 HX Base Yr 2005

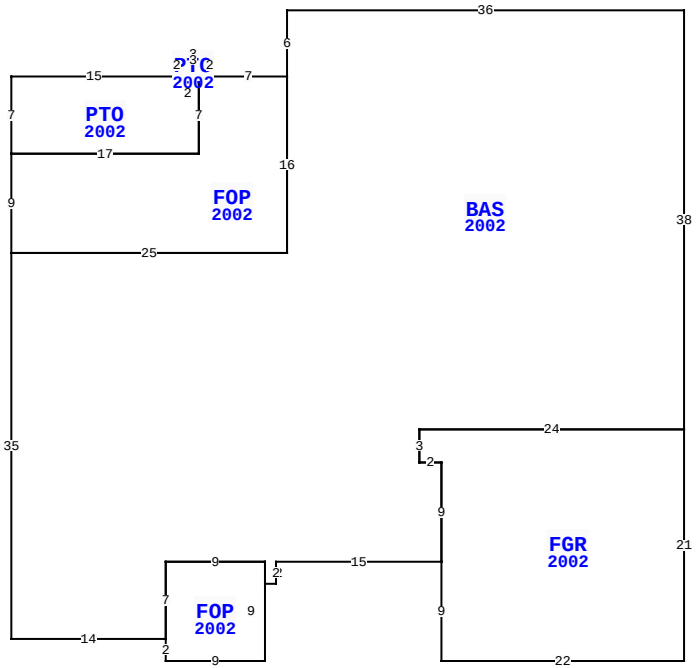

BLD DATE
XF DATE
INC DATE
LGL DATE
LAND DATE 03/12/2024 MLU
AG DATE

9518 SPRING BLOSSOM CT, FERNANDINA BEACH

VALUATION SUMMARY

VALUATION BY		STANDARD
Tax Group: 8	Tax Dist:	
BUILDING MARKET VALUE		373,294
TOTAL MARKET OB/XF VALUE		84,931
TOTAL LAND VALUE - MARKET		300,000
TOTAL MARKET VALUE		758,225
SOH/AGL Deduction		384,933
ASSESSED VALUE		373,292
TOTAL EXEMPTION VALUE	HX HB	50,000
BASE TAXABLE VALUE		323,292
TOTAL JUST VALUE		758,225
NCON VALUE		0
INCOME VALUE		
PREVIOUS YEAR MKT VALUE		694,324

PERMIT NUM	DESCRIPTION	AMT	ISSUED
B1632656	SCRNENCL	64,594	07/01/2016
B1530955	SWIM POOL	58,100	08/01/2015
B018613	NEW CONSTR	189,120	07/01/2001

SALES DATA

OFF RECORD Number	DATE	TYPE INST	Q U	V I	RSN CD	SALE PRICE
0987/1469	5/22/2001	WD	Q	V		71,500
GRANTOR: BRYLEN HOMES LTD						
GRANTEE: ALTERIO HARRY A & L						
0946/1681	8/25/2000	WD	U	V	09	104,000
GRANTOR: OCEAN REACH JOINT VEN						
GRANTEE: BRYLEN HOMES LTD						

BUILDING NOTES

BUILDING DIMENSIONS

BAS=[YR=2002] W36 S6 FOP=[YR=2002] W7 PTO=[YR=2002] N2 W3 S2 PTO=[YR=2002] W15 S7 E17 N7 W2$ E3$ W1 S7 W17 S9 E25 N16$ S16 W25 S35 E14 FOP=[YR=2002] S2 E9 N9 W9 S7$ N7 E9 S2 E1 N2 E15 FGR=[YR=2002] S9 E22 N21 W24 S3 E2 S9$ N9 W2 N3 E24 N38$.

EXTRA FEATURES

LN	OB/XF CODE	DESCRIPTION	BLD	CAP	L	W	UNITS	UT	Adj R	ADJ UNIT PRICE	ORIG COND	YEAR ON	YEAR ACTUAL	Q	% COND	OB/XF MKT VALUE	NOTES
1	0500	FP-PRE FAB	0	100	0	0	1.00	UT	3,500.00	3,500.00	100	2002	2002	3	86	3,010	
2	0858	SCULP CONC	0	100	0	0	998.00	SF	13.00	13.00	100	2002	2002	3	95	12,325	
3	0858	SCULP CONC	0	100	0	0	100.00	SF	13.00	13.00	100	2002	2002	3	95	1,235	
4	0911	SCRN RM A	0	100	0	0	1,688.00	SF	17.50	17.50	100	2016	2016	3	74	21,860	
5	0861	POOL GUNIT	0	100	0	0	580.00	SF	85.00	85.00	100	2015	2015	3	78	38,454	
6	0855	CONC PAVER	0	100	0	0	721.00	SF	10.00	10.00	100	2015	2015	3	95	6,850	
7	0855	CONC PAVER	0	100	0	0	126.00	SF	10.00	10.00	100	2015	2015	3	95	1,197	

LAND DESCRIPTION

TOTAL OB/XF 84,931

LN	USE CODE	CLS	LAND USE DESCRIPTION	CAP	RD	LOC ZONE	FRONT	DEPTH	TOT LND UTS	UNIT TYPE	DT	DPTH FACT	% COND	TOT ADJ	UNIT PRICE	ADJ UNIT PRICE	LAND VALUE	OTHER ADJUSTMENTS AND NOTES	YEAR	DENSITY	DECL	FRZ	YR	CONSRV
1	000100	C	SFR	100	0003	PUD	0.00	0.00	1.00	LT		1.00	1.00	1.00	300,000.00	300,000.00	300,000							

REVIEW DATE 07/29/2022 BY KBA Total Acres: 0.00 Total Land Value: 300,000 Market: 0 Agricultural: 0 Common: 300,000 PRINTED 08/06/2024 BY SYS