LOT 11 IN OR 986/236
AZALEA POINTE PB 6/164-165

MESSINA ALICE M
9550 HILDRETH LANE
FERNANDINA BEACH, FL 32034

2024

00-00-30-0131-0011-0000

NASSAU COUNTY PROPERTY

BUILDING CHARACTERISTICS

ELEMENT	CD	CONSTRUCTION
Exterior Wall	16	WD FR STUC 100
Roof Structur	03	GABLE/HIP 100
Roof Cover	03	COMP SHNGL 100
Interior Wall	05	DRYWALL 100
Interior Floo	14	CARPET 70
Interior Floo	11	CLAY TILE 30
Air Condition	03	CENTRAL 100
Heating Type	04	AIR DUCTED 100
Bedrooms		4 100
Bathrooms		3.5 100
Frame	02	WOOD FRAME 100
Stories	2.	2. 100
Units		0 100
Occupancy	00	NONE 100
Quality	06	Quality Level 06
DOR CODE	0100	SINGLE FAMILY
MAP NUM		MKT AREA 03
NEIGHBORHOOD/LOC	3030.00	

AREA TYPE	TOTAL GROSS AREA	PCT OF BASE	TOT ADJ AREA	SUBAREA MARKET VALUE
BAS	2,664	100	2,664	354,814
FGR	689	55	379	50,479
FOP	126	30	38	5,061
FOP	200	30	60	7,991
FUS	644	100	644	85,773
STP	8	10	1	133
TOTALS	4,331		3,786	504,251

MARKET ADJUSTMENTS

TYPE	MDL	EFF. AREA	TOT ADJ PTS	EFF. BASE RATE	REPL. COST NEW	AYB	EYB	ECON	FNCT		NORM	% COND
0900	01	3,786	115.8165	144.77	548,099	2002	2007	0	0	0	8.00	92.00

1 SNGL FAM – 100% - 2005 Heated Area: 3308 HX Base Yr 2005

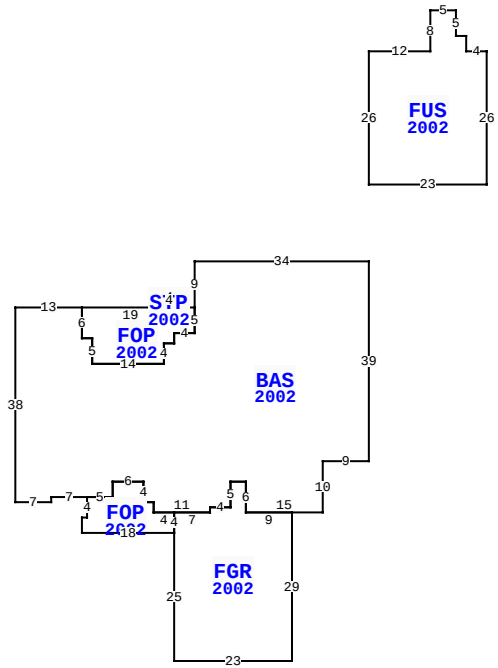

9550 HILDRETH LN, FERNANDINA BEACH

BLD DATE		LGL DATE	
XF DATE		LAND DATE	03/12/2024 MLU
INC DATE		AG DATE	

NASSAU COUNTY PROPERTY — VALUATION SUMMARY

VALUATION BY		STANDARD
Tax Group: 8	Tax Dist:	
BUILDING MARKET VALUE		504,251
TOTAL MARKET OB/XF VALUE		10,298
TOTAL LAND VALUE - MARKET		300,000
TOTAL MARKET VALUE		814,549
SOH/AGL Deduction		434,415
ASSESSED VALUE		380,134
TOTAL EXEMPTION VALUE	HX HB WX	55,000
BASE TAXABLE VALUE		325,134
TOTAL JUST VALUE		814,549
NCON VALUE		0
INCOME VALUE		
PREVIOUS YEAR MKT VALUE		742,059

PERMIT NUM	DESCRIPTION	AMT	ISSUED
20212546	REPAIR/RRF	0	03/01/2021
B018612	NEW CONSTR	257,820	07/01/2001

SALES DATA

OFF RECORD Number	DATE	TYPE INST	Q / U	V / I	RSN CD	SALE PRICE
0986/0236	5/14/2001	WD	Q	V		68,000
GRANTOR: BRYLEN HOMES LTD						
GRANTEE: MESSINA ANDREW & AL						
0956/1560	11/02/2000	WD	U	V	09	208,000
GRANTOR: OCEAN REACH JOINT VEN						
GRANTEE: BRYLEN HOMES LTD						

BUILDING NOTES

EXTRA FEATURES

LN	OB/XF CODE	DESCRIPTION	BLD	CAP	L	W	UNITS	UT	Adj R	ADJ UNIT PRICE	ORIG COND	YEAR ON	YEAR ACTUAL	Q	% COND	OB/XF MKT VALUE	NOTES
1	0500	FP-PRE FAB	0	100	0	0	1.00	UT	3,500.00	3,500.00	100	2002	2002	3	86	3,010	
2	0812	CONCRETE C	0	100	0	0	2,019.00	SF	4.00	4.00	100	2002	2002	3	82	6,622	
3	0810	CONCRETE A	0	100	0	0	125.00	SF	6.50	6.50	100	2002	2002	3	82	666	

BUILDING DIMENSIONS

BAS=[YR=2002] W34 S9 FOP=[YR=2002] W3 STP=[YR=2002] N2 W4 S2 E4$ W19 S6 E2 S5 E14 N4 E2 N2 E4 N5$ S5 W4 S2 W2 S4 W14 N5 W2 N6 W13 S38 E7 N1 E7 FOP=[YR=2002] S4 W1 S3 E18 FGR=[YR=2002] S25 E23 N29 W9 N6 W3 S5 W4 S1 W7 S4$ N4 W4 N2 W2 N4 W6 S3 W5$ E5 N3 E6 S4 E2 S2 E11 N1 E4 N5 E3 S6 E15 N10 E9 N39$ PTR=N15 FUS=[YR=2002] N26 E12 N8 E5 S5 E2 S3 E4 S26 W23$ S15 $.

LAND DESCRIPTION

TOTAL OB/XF 10,298

LN	USE CODE	CLS	LAND USE DESCRIPTION	CAP	RD	LOC ZONE	FRONT	DEPTH	TOT LND UTS	UNIT TYPE	DT	DPTH FACT	% COND	TOT ADJ	UNIT PRICE	ADJ UNIT PRICE	LAND VALUE	OTHER ADJUSTMENTS AND NOTES	YEAR	DENSITY	DECL	FRZ	YR	CONSRV
1	000100	C	SFR	100	0003	PUD	0.00	0.00	1.00	LT		1.00	1.00	1.00	300,000.00	300,000.00	300,000							

REVIEW DATE 10/11/2021 BY RK Total Acres: 0.00 Total Land Value: 300,000 Market: 0 Agricultural: 0 Common: 300,000 PRINTED 08/06/2024 BY SYS