LOT 1
AZALEA POINTE PB 6/164-165

ROBINSON JAMES C
9511 HILDRETH LN
FERNANDINA BEACH, FL 32034

2024

00-00-30-0131-0001-0000

NASSAU COUNTY PROPERTY

BUILDING CHARACTERISTICS

ELEMENT	CD	CONSTRUCTION
Exterior Wall	16	WD FR STUC 100
Roof Structur	03	GABLE/HIP 100
Roof Cover	03	COMP SHNGL 100
Interior Wall	05	DRYWALL 100
Interior Floo	11	CLAY TILE 50
Interior Floo	14	CARPET 50
Air Condition	03	CENTRAL 100
Heating Type	04	AIR DUCTED 100
Bedrooms		4 100
Bathrooms		4 100
Frame	02	WOOD FRAME 100
Stories	1.5	1.5 100
Units		0 100
Occupancy	00	NONE 100
Quality	06	Quality Level 06
DOR CODE	0100	SINGLE FAMILY
MAP NUM		MKT AREA 03
NEIGHBORHOOD/LOC	3030.00	

AREA TYPE	TOTAL GROSS AREA	PCT OF BASE	TOT ADJ AREA	SUBAREA MARKET VALUE
BAS	2,625	100	2,625	351,067
FGR	748	55	411	54,967
FOP	213	30	64	8,560
FOP	250	30	75	10,030
FUS	623	100	623	83,320
STP	12	10	1	133
TOTALS	4,471		3,799	508,078

MARKET ADJUSTMENTS

TYPE	MDL	EFF. AREA	TOT ADJ PTS	EFF. BASE RATE	REPL. COST NEW	AYB	EYB	ECON	FNCT		NORM	% COND
0900	01	3,799	119.5425	149.43	567,685	2002	2002	0	0	0	10.50	89.50

1 SNGL FAM – 100% - 2004 Heated Area: 3248 HX Base Yr 2004

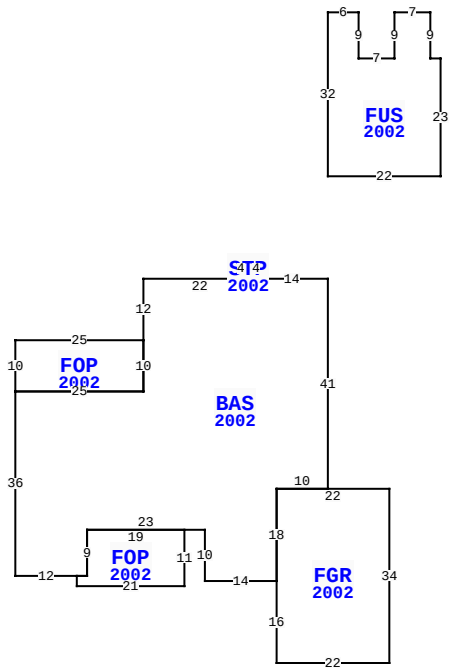

9511 HILDRETH LN, FERNANDINA BEACH

BLD DATE		LGL DATE	
XF DATE		LAND DATE	03/12/2024 MLU
INC DATE		AG DATE	

NASSAU COUNTY PROPERTY — VALUATION SUMMARY

VALUATION BY		STANDARD
Tax Group: 8	Tax Dist:	
BUILDING MARKET VALUE		508,078
TOTAL MARKET OB/XF VALUE		19,624
TOTAL LAND VALUE - MARKET		285,000
TOTAL MARKET VALUE		812,702
SOH/AGL Deduction		416,636
ASSESSED VALUE		396,066
TOTAL EXEMPTION VALUE	HX HB WR SX	105,000
BASE TAXABLE VALUE		291,066
TOTAL JUST VALUE		812,702
NCON VALUE		0
INCOME VALUE		
PREVIOUS YEAR MKT VALUE		743,507

PERMIT NUM	DESCRIPTION	AMT	ISSUED
B0209649	XFOB	4,800	05/01/2002
B0108637	NEW CONSTR	271,920	08/01/2001

SALES DATA

OFF RECORD Number	DATE	TYPE INST	Q U	V I	RSN CD	SALE PRICE
2340/1499	2/19/2020	SW	U	I	11	100
GRANTOR: ROBINSON JAMES C & PE						
GRANTEE: ROBINSON JAMES C &						
2340/1497	2/19/2020	TD	U	I	11	100
GRANTOR: ROBINSON JAMES & PENE						
GRANTEE: ROBINSON JAMES C &						

BUILDING NOTES

BUILDING DIMENSIONS

BAS=[YR=2002] W14 STP=[YR=2002] N4 W3 S4 E3$ W22 S12 FOP=[YR=2002] W25 S10 E25 N10$ S10 W25 S36 E12 FOP=[YR=2002] S2 E21 N11 W19 S9 W2$ E2 N9 E23 S10 E14 FGR=[YR=2002] S16 E22 N34 W22 S18$ N18 E10 N41$ PTR=N20 FUS=[YR=2002] N32 E6 S9 E7 N9 E7 S9 E2 S23 W22$ S20$.

EXTRA FEATURES

LN	OB/XF CODE	DESCRIPTION	BLD	CAP	L	W	UNITS	UT	Adj R	ADJ UNIT PRICE	ORIG COND	YEAR ON	YEAR ACTUAL	Q	% COND	OB/XF MKT VALUE	NOTES
1	0500	FP-PRE FAB	0	100	0	0	1.00	UT	3,500.00	3,500.00	100	2002	2002	3	86	3,010	
2	0811	CONCRETE B	0	100	0	0	863.00	SF	5.20	5.20	100	2002	2002	3	82	3,680	
3	0811	CONCRETE B	0	100	0	0	414.00	SF	5.20	5.20	100	2002	2002	3	82	1,765	
4	0861	POOL GUNIT	0	100	0	0	277.00	SF	85.00	85.00	100	2002	2002	3	29	6,828	
5	0845	KOOL DECK	0	100	0	0	216.00	SF	7.25	7.25	100	2002	2002	3	82	1,284	
6	0810	CONCRETE A	0	100	0	0	70.00	SF	6.50	6.50	100	2002	2002	3	82	373	
7	0910	SCRN RM L	0	100	0	0	528.00	SF	15.00	15.00	100	2002	2002	3	20	1,584	
8	0871	POOL HTR R	0	100	0	0	1.00	UT	2,000.00	2,000.00	100	2012	2012	3	55	1,100	

LAND DESCRIPTION

TOTAL OB/XF 19,624

LN	USE CODE	CLS	LAND USE DESCRIPTION	CAP	RD	LOC ZONE	FRONT	DEPTH	TOT LND UTS	UNIT TYPE	DT	DPTH FACT	% COND	TOT ADJ	UNIT PRICE	ADJ UNIT PRICE	LAND VALUE	OTHER ADJUSTMENTS AND NOTES	YEAR	DENSITY	DECL	FRZ	YR	CONSRV
1	000100	C	SFR	100	0003	PUD	0.00	0.00	1.00	LT		1.00	1.00	0.95	300,000.00	285,000.00	285,000							

REVIEW DATE 07/29/2022 BY KBA Total Acres: 0.00 Total Land Value: 285,000 Market: 0 Agricultural: 0 Common: 285,000 PRINTED 08/06/2024 BY SYS