BLOCK 3 LOT 21
IN OR 1543/1054
AMERICAN BEACH SUB #1 PB 2/42

ALLEN CASSANDRA S & SAMUEL JR
923 RIDGEWALL CT
ORANGE PARK, FL 32065

2024

00-00-30-010A-0003-0210

BUILDING CHARACTERISTICS

ELEMENT	CD	CONSTRUCTION
Exterior Wall	05	AVERAGE 100
Roof Structur	03	GABLE/HIP 100
Roof Cover	03	COMP SHNGL 100
Interior Wall	05	DRYWALL 100
Interior Floo	12	HARDWOOD 60
Interior Floo	11	CLAY TILE 40
Air Condition	03	CENTRAL 100
Heating Type	04	AIR DUCTED 100
Bedrooms		3 100
Bathrooms		4.5 100
Frame	02	WOOD FRAME 100
Stories	3.	3. 100
Units		0 100
Quality	04	Quality Level 04
DOR CODE	0100	SINGLE FAMILY
MAP NUM		MKT AREA 03
NEIGHBORHOOD/LOC	3038.00	

AREA TYPE	TOTAL GROSS AREA	PCT OF BASE	TOT ADJ AREA	SUBAREA MARKET VALUE
BAS	196	100	196	35,475
FGR	276	55	152	27,512
FGR	306	55	168	30,408
FOP	138	30	41	7,421
FOP	138	30	41	7,421
FOP	210	30	63	11,403
FST	60	55	33	5,973
FST	25	55	14	2,534
FST	40	55	22	3,982
FUS	1,028	100	1,028	186,067
TOTALS	3,666		2,830	512,227

MARKET ADJUSTMENTS

TYPE	MDL	EFF. AREA	TOT ADJ PTS	EFF. BASE RATE	REPL. COST NEW	AYB	EYB	ECON	FNCT		NORM	% COND
0900	11	2,830	148.5158	185.64	525,361	2017	2017	0	0	0	2.50	97.50

1 SNGL FAM – 0% - 0 Heated Area: 2276 HX Base Yr

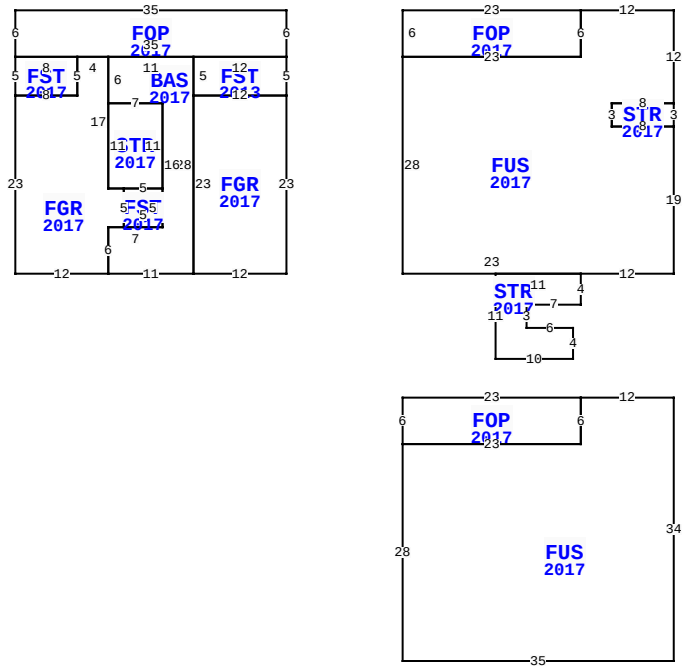

** This building has 14 Sub-Areas

5467 GREGG ST, FERNANDINA BEACH

BLD DATE		LGL DATE	
XF DATE		LAND DATE	04/15/2024 MLU
INC DATE		AG DATE	

EXTRA FEATURES

L N	OB/XF CODE	DESCRIPTION	BLD	CAP	L	W	UNITS	UT	Adj R	ADJ UNIT PRICE	ORIG COND	YEAR ON	YEAR ACTUAL	Q	% COND	OB/XF MKT VALUE	NOTES
1	0810	CONCRETE A	0	0	0	0	1,171.00	SF	6.50	6.50	100	2017	2017	3	97	7,383	

NASSAU COUNTY PROPERTY

PAGE 1 of 1 8

VALUATION SUMMARY

VALUATION BY	STANDARD
Tax Group: 8	Tax Dist:
BUILDING MARKET VALUE	512,227
TOTAL MARKET OB/XF VALUE	7,383
TOTAL LAND VALUE - MARKET	572,250
TOTAL MARKET VALUE	1,091,860
SOH/AGL Deduction	345,740
ASSESSED VALUE	746,120
TOTAL EXEMPTION VALUE	0
BASE TAXABLE VALUE	746,120
TOTAL JUST VALUE	1,091,860
NCON VALUE	0
INCOME VALUE	
PREVIOUS YEAR MKT VALUE	987,000

PERMIT NUM	DESCRIPTION	AMT	ISSUED
17002351	CO ISSUED	0	03/22/2017
B1632881	NEW CONSTR	297,542	08/19/2016

SALES DATA

OFF RECORD Number	DATE	TYPE INST	Q U /	V I /	RSN CD	SALE PRICE
1543/1054	12/31/2007	WD	U	V	01	285,000
GRANTOR: GRIFFITH METRO &						
GRANTEE: ALLEN CASSANDRA S &						
1392/0132	2/28/2006	QC	U	V	01	100
GRANTOR: SANDERS THERESA H &						
GRANTEE: GRIFFITH METRO						

BUILDING NOTES

BUILDING DIMENSIONS

FOP=[YR=2017] W35 S6 FST=[YR=2017] S5 FGR=[YR=2017] S23 E12 BAS=[YR=2017] E11 FGR=[YR=2017] E12 N23 FST=[YR=2013] N5 W12 S5 E12$ W12 S23$ N28 W11 S6 STR=[YR=2017] S11 E2 FST=[YR=2017] E5 S5 W5 N5$ E5 N11 W7$ E7 S16 W7 S6 $ N6 E2 N5 W2 N17 W4 S5 W8$ E8 N5 W8$ E35 N6$ PTR=E15 FOP=[YR=2017] E23 FUS=[YR=2017] E12 S12 STR=[YR=2017] S3 W8 N3 E8$ W8 S3 E8 S19 W12 STR=[YR=2017] W11 S11 E10 N4 W6 N3 E7 N4$ W23 N28 E23 N6$ S6 W23 N6$ W15$ PTR=E15 S50 FOP=[YR=2017] E23 FUS=[YR=2017] E12 S34 W35 N28 E23 N6$ S6 W23 N6$ N50 W15$.

LAND DESCRIPTION

TOTAL OB/XF 7,383

L N	USE CODE	CLS	LAND USE DESCRIPTION	CAP	R D	LOC ZONE	FRONT	DEPTH	TOT LND UTS	UNIT TYPE	D T	DPTH FACT	% COND	TOT ADJ	UNIT PRICE	ADJ UNIT PRICE	LAND VALUE	OTHER ADJUSTMENTS AND NOTES	YEAR	DENSITY	DECL	FRZ	YR	CONSRV
1	000100	C	SFR	0		RSF-2	50.00	125.00	50.00	FF		1.00	1.00	1.09	10,500.00	11,445.00	572,250							

REVIEW DATE 03/18/2020 BY DJP Total Acres: 0.00 Total Land Value: 572,250 Market: 0 Agricultural: 0 Common: 572,250 PRINTED 08/06/2024 BY SYS