TRACT 2 EX W1/2
IN OR 1886/1338
AIKEN SUB UNR

MOORE RICHARD W/SMITH LAURIE L
1337 AUTUMN TRACE
FERNANDINA BEACH, FL 32034

2024

00-00-30-0020-0002-0000

BUILDING CHARACTERISTICS

ELEMENT	CD	CONSTRUCTION
Exterior Wall	12	CEDAR 100
Roof Structur	03	GABLE/HIP 100
Roof Cover	03	COMP SHNGL 100
Interior Wall	05	DRYWALL 100
Interior Floo	12	HARDWOOD 70
Interior Floo	11	CLAY TILE 30
Air Condition	03	CENTRAL 100
Heating Type	04	AIR DUCTED 100
Bedrooms		4 100
Bathrooms		3.5 100
Frame	02	WOOD FRAME 100
Stories	2.	2. 100
Units		0 100
BUD8 Adjustme	05	DIST 1A 100
Occupancy	00	NONE 100
Quality	03	Quality Level 03
DOR CODE	0100	SINGLE FAMILY
MAP NUM		MKT AREA 03
NEIGHBORHOOD/LOC	3027.00	

AREA TYPE	TOTAL GROSS AREA	PCT OF BASE	TOT ADJ AREA	SUBAREA MARKET VALUE
BAS	2,027	100	2,027	214,649
BAS	44	100	44	4,659
DCK	444	10	44	4,659
FGR	950	55	522	55,277
FOP	276	30	83	8,790
FUS	1,029	100	1,029	108,966
SFB	555	80	444	47,017
STR	56	10	6	636
TOTALS	5,381		4,199	444,652

MARKET ADJUSTMENTS

TYPE	MDL	EFF. AREA	TOT ADJ PTS	EFF. BASE RATE	REPL. COST NEW	AYB	EYB	ECON	FNCT		NORM	% COND
0900	01	4,199	103.3120	129.14	542,259	1987	1987	0	0	0	18.00	82.00

1 SNGL FAM – 0% - 0 Heated Area: 3544 HX Base Yr

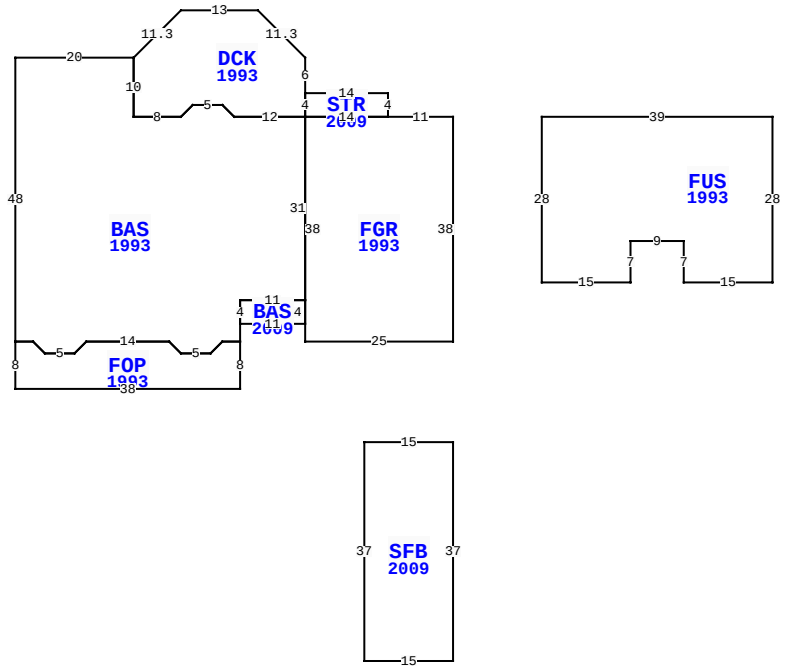

BLD DATE		LGL DATE	
XF DATE		LAND DATE	03/26/2024 MLU
INC DATE		AG DATE	

1337 AUTUMN TRCE, FERNANDINA BEACH

NASSAU COUNTY PROPERTY

PAGE 1 of 1 8

VALUATION SUMMARY

VALUATION BY	STANDARD
Tax Group: 8	Tax Dist:
BUILDING MARKET VALUE	444,652
TOTAL MARKET OB/XF VALUE	11,126
TOTAL LAND VALUE - MARKET	300,000
TOTAL MARKET VALUE	755,778
SOH/AGL Deduction	200,282
ASSESSED VALUE	555,496
TOTAL EXEMPTION VALUE	0
BASE TAXABLE VALUE	555,496
TOTAL JUST VALUE	755,778
NCON VALUE	0
INCOME VALUE	
PREVIOUS YEAR MKT VALUE	686,432

PERMIT NUM	DESCRIPTION	AMT	ISSUED
R1213072	ROOF	13,515	08/01/2012

SALES DATA

OFF RECORD Number	DATE	TYPE INST	Q / U	V / I	RSN CD	SALE PRICE
1886/1338	10/25/2013	WD	Q	I	02	407,500
GRANTOR: YOUNG DAWN W & RICHAR						
GRANTEE: MOORE RICHARD W & L						
1084/1189	10/02/2002	QC	U	I	01	100
GRANTOR: YOUNG DAWN W						
GRANTEE: YOUNG DAWN W & RICH						

BUILDING NOTES

BUILDING DIMENSIONS

FGR=[YR=1993] W11 STR=[YR=2009] N4 W14 DCK=[YR=1993] N6 L8 U8 W13 D8 L8 BAS=[YR=1993] W20 S48 FOP=[YR=1993] S8 E38 N8 W3 D2 L2 W5 U2 L2 W14 D2 L2 W5 U2 L2 W3$ E3 D2 R2 E5 U2 R2 E14 D2 R2 E5 U2 R2 E3N3 BAS=[YR=2009] E11 N4 W11 S4 $ N4 E11 N31 W12 U2 L2 W5 D2 L2 W8 N10 $ S10 E8 U2 R2 E5 D2 R2 E12 N4 $ S4 E14 $ W14 S38 E25 N38 $ PTR= E15 FUS=[YR=1993] E39 S28 W15 N7 W9 S7 W15 N28 $ W15 $ PTR= S55 SFB=[YR=2009] S37 W15 N37 E15 $ N55 $.

EXTRA FEATURES

LN	OB/XF CODE	DESCRIPTION	BLD	CAP	L	W	UNITS	UT	Adj R	ADJ UNIT PRICE	ORIG COND	YEAR ON	YEAR ACTUAL	Q	% COND	OB/XF MKT VALUE	NOTES
1	0810	CONCRETE A	0	0	0	0	510.00	SF	6.50	6.50	100	1987	1987	3	52	1,724	
2	0504	FP-ELECTRI	0	0	0	0	1.00	UT	2,000.00	2,000.00	100	1987	1987	3	62	1,240	
3	0810	CONCRETE A	0	0	50	3	150.00	SF	6.50	6.50	100	1987	1987	3	52	507	
4	0812	CONCRETE C	0	0	0	0	1,738.00	SF	4.00	4.00	100	1990	1990	3	59.5	4,136	
5	0858	SCULP CONC	0	0	0	0	282.00	SF	13.00	13.00	100	2005	2005	3	96	3,519	

LAND DESCRIPTION

TOTAL OB/XF 11,126

LN	USE CODE	CLS	LAND USE DESCRIPTION	CAP	RD	LOC ZONE	FRONT	DEPTH	TOT LND UTS	UNIT TYPE	DT	DPTH FACT	% COND	TOT ADJ	UNIT PRICE	ADJ UNIT PRICE	LAND VALUE	OTHER ADJUSTMENTS AND NOTES	YEAR	DENSITY	DECL	FRZ	YR	CONSRV
1	000100	C	SFR	0		RSF-	1145.00	150.00	1.00	LT		1.00	1.00	1.00	300,000.00	300,000.00	300,000							

REVIEW DATE 01/31/2024 BY KBA Total Acres: 0.00 Total Land Value: 300,000 Market: 0 Agricultural: 0 Common: 300,000 PRINTED 08/06/2024 BY SYS