LOT 7
IN OR 1350/1734
ROBERTS HIGHLANDS PB 5/5

PRATT RANDY L & BETTY S
86044 FAITH AVE
YULEE, FL 32097

2023

51-3N-27-4880-0007-0000

NASSAU COUNTY PROPERTY

BUILDING CHARACTERISTICS

ELEMENT	CD	CONSTRUCTION
Exterior Wall	19	COMMON BRK 60
Exterior Wall	05	AVERAGE 40
Roof Structur	03	GABLE/HIP 100
Roof Cover	03	COMP SHNGL 100
Interior Wall	05	DRYWALL 60
Interior Wall	06	CUST PANEL 40
Interior Floo	14	CARPET 90
Interior Floo	08	SHT VINYL 10
Air Condition	02	WINDOW 100
Heating Type	02	CONVECTION 100
Bedrooms		4 100
Bathrooms		2 100
Frame	02	WOOD FRAME 100
Stories	2.	2. 100
Units		0 100
BUD8 Adjustme	04	DIST 01 100
Occupancy	00	NONE 100
Quality	03	Quality Level 03
DOR CODE	0100	SINGLE FAMILY
MAP NUM		MKT AREA 04
NEIGHBORHOOD/LOC	4053.00	

AREA TYPE	TOTAL GROSS AREA	PCT OF BASE	TOT ADJ AREA	SUBAREA MARKET VALUE
BAS	1,625	100	1,625	103,542
FOP	90	30	27	1,720
FOP	90	30	27	1,720
FST	165	55	91	5,798
FUS	689	100	689	43,902
STP	32	10	3	191
UCP	620	20	124	7,901
UST	372	45	167	10,641
TOTALS	3,683		2,753	175,416

MARKET ADJUSTMENTS

TYPE	MDL	EFF. AREA	TOT ADJ PTS	EFF. BASE RATE	REPL. COST NEW	AYB	EYB	ECON	FNCT		NORM	% COND
0100	01	2,753	105.2160	94.96	261,425	1962	1962	0	0	0	32.90	67.10

1 SINGLE FAM – 100% - 2006 Heated Area: 2314 HX Base Yr 2006

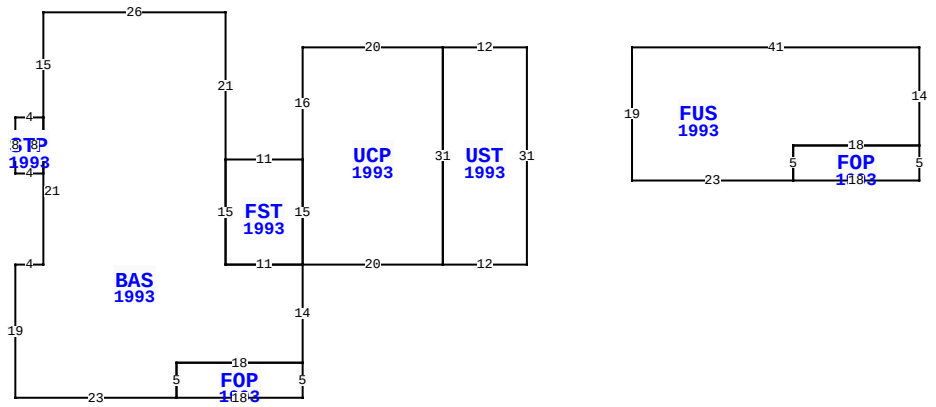

86044 FAITH AVE, YULEE

BLD DATE		LGL DATE	
XF DATE		LAND DATE	
INC DATE		AG DATE	

VALUATION SUMMARY

VALUATION BY		STANDARD
Tax Group: 4	Tax Dist:	
BUILDING MARKET VALUE		175,416
TOTAL MARKET OB/XF VALUE		3,379
TOTAL LAND VALUE - MARKET		50,000
TOTAL MARKET VALUE		228,795
SOH/AGL Deduction		103,727
ASSESSED VALUE		125,068
TOTAL EXEMPTION VALUE	HX HB	50,000
BASE TAXABLE VALUE		75,068
TOTAL JUST VALUE		228,795
NCON VALUE		0
INCOME VALUE		
PREVIOUS YEAR MKT VALUE		188,392

PERMIT NUM	DESCRIPTION	AMT	ISSUED

SALES DATA

OFF RECORD Number	DATE	TYPE INST	Q U	V I	RSN CD	SALE PRICE
1350/1734	9/19/2005	WD	U	I	05	92,500
GRANTOR: DEUTSCHE BANK NATIONA						
GRANTEE: PRATT RANDY L & BET						
1312/0410	4/25/2005	CT	U	I	14	100
GRANTOR: CLERK OF COURT						
GRANTEE: DEUTSCHE BANK NATIO						

BUILDING NOTES

BUILDING DIMENSIONS

UST=[YR=1993] W12 UCP=[YR=1993] W20 S16 FST=[YR=1993] W11
BAS=[YR=1993] N21 W26 S15 STP=[YR=1993] W4 S8 E4 N8 $ S21 W4
S19 E23 FOP=[YR=1993] E18 N5 W18 S5 $ N5 E18 N14 W11 N15 $
S15 E11 N15 $ S15 E20 N31 $ S31 E12 N31 $ PTR= E15
FUS=[YR=1993] E41 S14 FOP=[YR=1993] S5 W18 N5 E18 $ W18 S5
W23 N19 $ W15 $.

EXTRA FEATURES

LN	OB/XF CODE	DESCRIPTION	BLD	CAP	L	W	UNITS	UT	Adj R	ADJ UNIT PRICE	ORIG COND	YEAR ON	YEAR ACTUAL	Q	% COND	OB/XF MKT VALUE	NOTES
1	0500	FP-PRE FAB	0	100	0	0	1.00	UT	3,500.00	3,500.00	100	1980	1980	3	49	1,715	
2	0810	CONCRETE A	0	100	0	0	320.00	SF	6.50	6.50	100	2000	2000	3	80	1,664	

LAND DESCRIPTION

TOTAL OB/XF 3,379

LN	USE CODE	CLS	LAND USE DESCRIPTION	CAP	RD	LOC ZONE	FRONT	DEPTH	TOT LND UTS	UNIT TYPE	DT	DPTH FACT	% COND	TOT ADJ	UNIT PRICE	ADJ UNIT PRICE	LAND VALUE	OTHER ADJUSTMENTS AND NOTES	YEAR	DENSITY	DECL	FRZ	YR	CONSRV
1	000100	C	SFR	100	0005	RS-2	90.00	115.00	1.00	LT		1.00	1.00	1.00	50,000.00	50,000.00	50,000							

REVIEW DATE 11/27/2017 BY SBX Total Acres: 0.00 Total Land Value: 50,000 Market: 0 Agricultural: 0 Common: 50,000 PRINTED 08/02/2023 BY SYS