LOT 9
IN OR 2184/1358
AMHURST OAKS PB 7/180

VANDEVEER STEVEN K & ASHLEY
45103 AMHURST OAKS DR
CALLAHAN, FL 32011

2023

51-2N-25-015A-0009-0000

BUILDING CHARACTERISTICS

ELEMENT	CD	CONSTRUCTION
Exterior Wall	31	HARDIE BRD 70
Exterior Wall	16	WD FR STUC 30
Roof Structur	08	IRREGULAR 100
Roof Cover	03	COMP SHNGL 100
Interior Wall	05	DRYWALL 100
Interior Floo	14	CARPET 70
Interior Floo	11	CLAY TILE 30
Air Condition	03	CENTRAL 100
Heating Type	04	AIR DUCTED 100
Bedrooms		3 100
Bathrooms		2 100
Frame	02	WOOD FRAME 100
Stories	1.5	1.5 100
Units		0 100
Occupancy	00	NONE 100
Quality	05	Quality Level 05
DOR CODE	0100	SINGLE FAMILY
MAP NUM		MKT AREA 07
NEIGHBORHOOD/LOC	7003.00	

AREA TYPE	TOTAL GROSS AREA	PCT OF BASE	TOT ADJ AREA	SUBAREA MARKET VALUE
BAS	1,879	100	1,879	188,735
FGR	461	55	254	25,513
FOP	52	30	16	1,607
FOP	120	30	36	3,616
FUS	266	100	266	26,719
TOTALS	2,778		2,451	246,190

MARKET ADJUSTMENTS

TYPE	MDL	EFF. AREA	TOT ADJ PTS	EFF. BASE RATE	REPL. COST NEW	AYB	EYB	ECON	FNCT		NORM	% COND
0100	01	2,451	119.2224	107.60	263,728	2006	2008	0	0	0	6.65	93.35

1 SINGLE FAM – 100% - 2019 Heated Area: 2145 HX Base Yr 2019

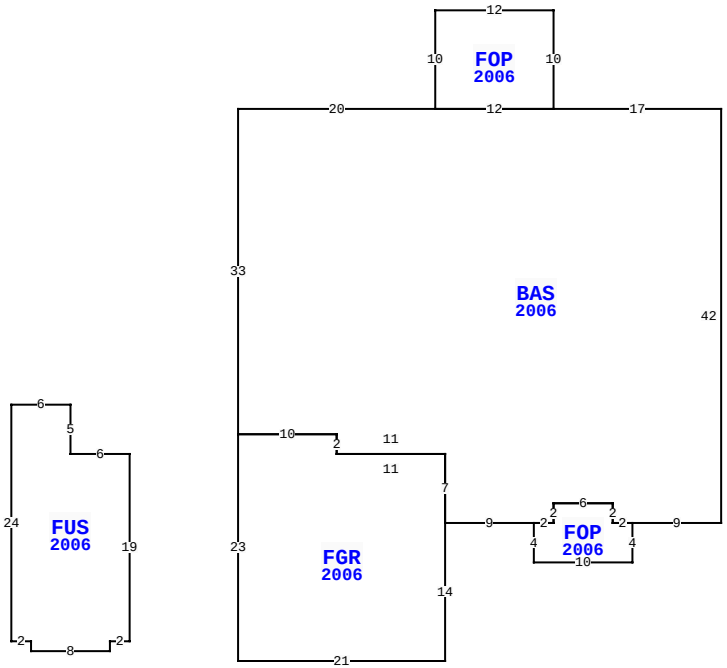

45103 AMHURST OAKS DR, CALLAHAN

BLD DATE		LGL DATE	
XF DATE		LAND DATE	
INC DATE		AG DATE	

NASSAU COUNTY PROPERTY

PAGE 1 of 1 1

VALUATION SUMMARY

VALUATION BY		STANDARD
Tax Group: 1	Tax Dist:	
BUILDING MARKET VALUE		246,190
TOTAL MARKET OB/XF VALUE		3,624
TOTAL LAND VALUE - MARKET		40,000
TOTAL MARKET VALUE		289,814
SOH/AGL Deduction		105,394
ASSESSED VALUE		184,420
TOTAL EXEMPTION VALUE	HX HB	50,000
BASE TAXABLE VALUE		134,420
TOTAL JUST VALUE		289,814
NCON VALUE		0
INCOME VALUE		
PREVIOUS YEAR MKT VALUE		245,252

PERMIT NUM	DESCRIPTION	AMT	ISSUED
BLDG8	REPAIR/RRF	0	07/01/2022
B2911	NEW CONSTR	137,994	05/03/2006

SALES DATA

OFF RECORD Number	DATE	TYPE INST	Q / U	V / I	RSN CD	SALE PRICE
2184/1358	3/19/2018	WD	Q	I	01	211,000
GRANTOR: BOWERS HOWSEY R & ANN						
GRANTEE: VANDEVEER STEVEN K						
1468/1906	1/02/2007	WD	U	I	21	223,900
GRANTOR: TOUSA HOMES INC						
GRANTEE: BOWERS HOWSEY R & A						

BUILDING NOTES

BUILDING DIMENSIONS

BAS=[YR=2006] W17 FOP=[YR=2006] N10 W12 S10 E12 $ W12 W20 S33 FGR=[YR=2006] S23 E21 N14 N7 W11 N2 W10 $ E10 S2 E11 S7 E9 FOP=[YR=2006] S4 E10 N4 W2 N2 W6 S2 W2 $ E2 N2 E6S2 E2 E9 N42 $ PTR= S35 W60 FUS=[YR=2006] W6 N5 W6 S24 E2 S1 E8 N1 E2 N19 $ E60 N35 $.

EXTRA FEATURES

LN	OB/XF CODE	DESCRIPTION	BLD	CAP	L	W	UNITS	UT	Adj R	ADJ UNIT PRICE	ORIG COND	YEAR ON	YEAR ACTUAL	Q	% COND	OB/XF MKT VALUE	NOTES
1	0811	CONCRETE B	0	100	0	0	792.00	SF	5.20	5.20	100	2006	2006	3	88	3,624	

LAND DESCRIPTION

TOTAL OB/XF 3,624

LN	USE CODE	CLS	LAND USE DESCRIPTION	CAP	RD	LOC ZONE	FRONT	DEPTH	TOT LND UTS	UNIT TYPE	DT	DPTH FACT	% COND	TOT ADJ	UNIT PRICE	ADJ UNIT PRICE	LAND VALUE	OTHER ADJUSTMENTS AND NOTES	YEAR	DENSITY	DECL	FRZ	YR	CONSRV
1	000100	C	SFR	100	0006	PUD	0.00	0.00	1.00	LT		1.00	1.00	1.00	40,000.00	40,000.00	40,000							

REVIEW DATE 01/14/2021 BY KWA Total Acres: 0.00 Total Land Value: 40,000 Market: 0 Agricultural: 0 Common: 40,000 PRINTED 08/02/2023 BY SYS