LOT 28
IN OR 2101/169
BLACKROCK HAMMOCK PB 6/286

NELSON CHRISTOPHER S JR & REBECCA
96141 SOUTHERN PRIDE CT
YULEE, FL 32097

2023

50-3N-28-016B-0028-0000

BUILDING CHARACTERISTICS

ELEMENT	CD	CONSTRUCTION
Exterior Wall	31	HARDIE BRD 100
Roof Structur	03	GABLE/HIP 100
Roof Cover	03	COMP SHNGL 100
Interior Wall	05	DRYWALL 100
Interior Floo	11	CLAY TILE 50
Interior Floo	14	CARPET 50
Air Condition	03	CENTRAL 100
Heating Type	04	AIR DUCTED 100
Bedrooms		5 100
Bathrooms		3.5 100
Frame	02	WOOD FRAME 100
Stories	2.	2. 100
Units		0 100
Occupancy	00	NONE 100
Quality	01	Quality Level 01
DOR CODE	0100	SINGLE FAMILY
MAP NUM		MKT AREA 04
NEIGHBORHOOD/LOC	4028.00	

AREA TYPE	TOTAL GROSS AREA	PCT OF BASE	TOT ADJ AREA	SUBAREA MARKET VALUE
BAS	1,985	100	1,985	257,091
FGR	837	55	460	59,578
FOP	100	30	30	3,886
FOP	191	30	57	7,382
FUS	1,396	100	1,396	180,805
PTO	48	5	2	259
PTO	50	5	2	259
STR	72	10	7	907
TOTALS	4,679		3,939	510,166

MARKET ADJUSTMENTS

TYPE	MDL	EFF. AREA	TOT ADJ PTS	EFF. BASE RATE	REPL. COST NEW	AYB	EYB	ECON	FNCT		NORM	% COND
0500	01	3,939	92.7450	132.16	520,578	2017	2017	0	0	0	2.00	98.00

1 SFR CUST – 100% - 2018 Heated Area: 3381 HX Base Yr 2018

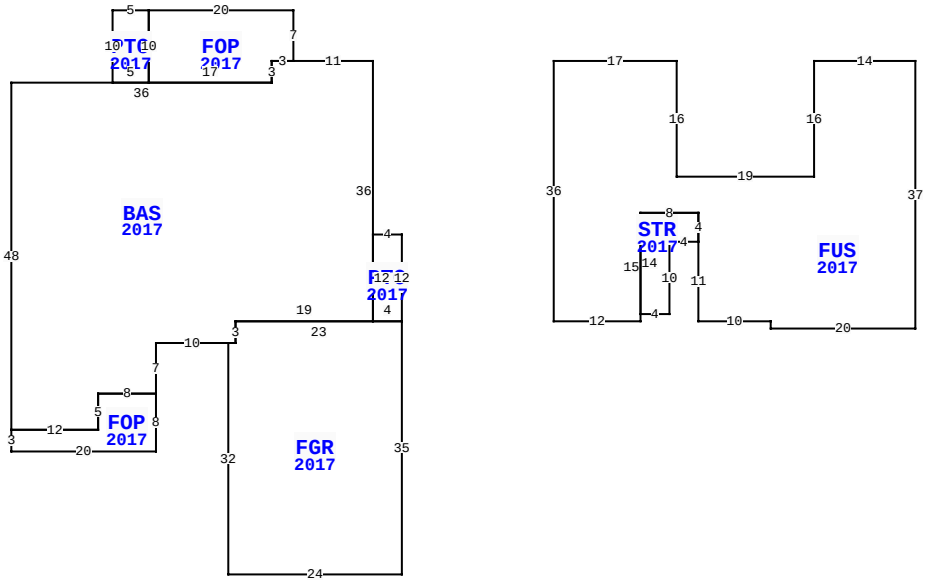

96141 SOUTHERN PRIDE CT, YULEE

BLD DATE	04/04/2023 NW	LGL DATE	
XF DATE		LAND DATE	
INC DATE		AG DATE	

NASSAU COUNTY PROPERTY

PAGE 1 of 1 4

VALUATION SUMMARY

VALUATION BY		STANDARD
Tax Group: 4	Tax Dist:	
BUILDING MARKET VALUE		510,166
TOTAL MARKET OB/XF VALUE		18,572
TOTAL LAND VALUE - MARKET		115,000
TOTAL MARKET VALUE		643,738
SOH/AGL Deduction		193,629
ASSESSED VALUE		450,109
TOTAL EXEMPTION VALUE	HX HB	50,000
BASE TAXABLE VALUE		400,109
TOTAL JUST VALUE		643,738
NCON VALUE		0
INCOME VALUE		
PREVIOUS YEAR MKT VALUE		561,877

PERMIT NUM	DESCRIPTION	AMT	ISSUED
B1632954	NEW CONSTR	424,248	08/01/2016

SALES DATA

OFF RECORD Number	DATE	TYPE INST	Q U	V I	RSN CD	SALE PRICE
2101/0169	2/10/2017	WD	Q	I	01	497,700
GRANTOR: CORNERSTONE HOMES OF						
GRANTEE: NELSON CHRISTOPHER						
2101/0168	2/08/2017	WD	Q	V	01	69,000
GRANTOR: CAPITAL CONSULTANTS L						
GRANTEE: CORNERSTONE HOMES O						

BUILDING NOTES

BUILDING DIMENSIONS

BAS=[YR=2017] W11 FOP=[YR=2017] N7 W20 PTO=[YR=2017] W5 S10 E5 N10$ S10 E17 N3 E3$ W3 S3 W36 S48 FOP=[YR=2017] S3 E20 N8 W8 S5 W12$ E12 N5 E8 N7 E10 FGR=[YR=2017] S32 E24 N35 PTO=[YR=2017] N12 W4 S12 E4 $ W23 S3 W1$ E1 N3 E19 N36$ PTR = E25 FUS=[YR=2017] E17 S16 E19 N16 E14 S37 W20 N1 W10 N11 STR=[YR=2017] W4 S10 W4 N14 E8 S4$ N4 W8 S15 W12 N36$ W25$.

EXTRA FEATURES

LN	OB/XF CODE	DESCRIPTION	BLD	CAP	L	W	UNITS	UT	Adj R	ADJ UNIT PRICE	ORIG COND	YEAR ON	YEAR ACTUAL	Q	% COND	OB/XF MKT VALUE	NOTES
1	0810	CONCRETE A	0	100	84	3	252.00	SF	6.50	6.50	100	2017	2017	3	97	1,589	
2	0812	CONCRETE C	0	100	0	0	1,550.00	SF	4.00	4.00	100	2017	2017	3	97	6,014	
3	0463	FENCE GATE	0	100	0	0	2.00	UT	300.00	300.00	100	2017	2017	3	94	564	
4	0462	ST/AL FNC	0	100	294	0	1,196.00	SF	10.00	10.00	100	2017	2017	3	87	10,405	

LAND DESCRIPTION

TOTAL OB/XF 18,572

LN	USE CODE	CLS	LAND USE DESCRIPTION	CAP	RD	LOC ZONE	FRONT	DEPTH	TOT LND UTS	UNIT TYPE	DT	DPTH FACT	% COND	TOT ADJ	UNIT PRICE	ADJ UNIT PRICE	LAND VALUE	OTHER ADJUSTMENTS AND NOTES	YEAR	DENSITY	DECL	FRZ	YR	CONSRV
1	000100	C	SFR	100		RS-1	0.00	0.00	1.00	LT		1.00	1.00	1.00	115,000.00	115,000.00	115,000							

REVIEW DATE 12/11/2017 BY KW Total Acres: 0.00 Total Land Value: 115,000 Market: 0 Agricultural: 0 Common: 115,000 PRINTED 08/02/2023 BY SYS