LOT 16
BLACKROCK HAMMOCK PB 6/286

GRIFFITH CHARLES JR & BEATRICE
96321 SOUTHERN LILY DR
YULEE, FL 32097

2023

50-3N-28-016B-0016-0000

BUILDING CHARACTERISTICS

ELEMENT	CD	CONSTRUCTION
Exterior Wall	31	HARDIE BRD 90
Exterior Wall	21	STONE 10
Roof Structur	08	IRREGULAR 100
Roof Cover	03	COMP SHNGL 100
Interior Wall	05	DRYWALL 100
Interior Floo	12	HARDWOOD 50
Interior Floo	14	CARPET 50
Air Condition	03	CENTRAL 100
Heating Type	04	AIR DUCTED 100
Bedrooms		5 100
Bathrooms		4.5 100
Frame	02	WOOD FRAME 100
Stories	2.	2. 100
Units		0 100
Quality	01	Quality Level 01
DOR CODE	0100	SINGLE FAMILY
MAP NUM		MKT AREA 04
NEIGHBORHOOD/LOC	4028.00	

AREA TYPE	TOTAL GROSS AREA	PCT OF BASE	TOT ADJ AREA	SUBAREA MARKET VALUE
BAS	2,709	100	2,709	446,886
FGR	662	55	364	60,047
FOP	107	30	32	5,279
FSP	528	40	211	34,807
FUS	988	100	988	162,984
STR	40	10	4	660
TOTALS	5,034		4,308	710,662

MARKET ADJUSTMENTS

TYPE	MDL	EFF. AREA	TOT ADJ PTS	EFF. BASE RATE	REPL. COST NEW	AYB	EYB	ECON	FNCT		NORM	% COND
0500	11	4,308	118.7930	169.28	729,258	2016	2016	0	0	0	2.55	97.45

1 SFR CUST – 100% - 2021 Heated Area: 3697 HX Base Yr 2021

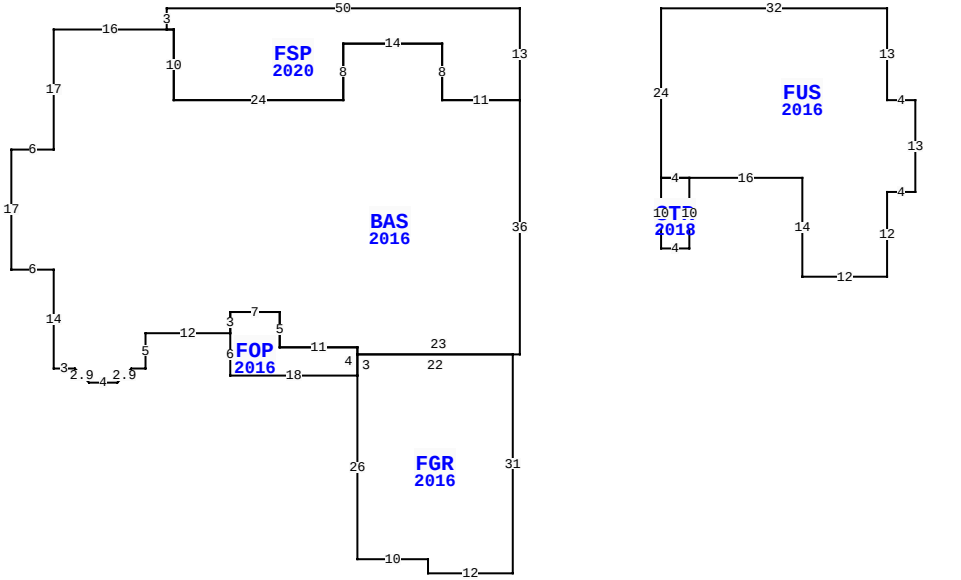

96321 SOUTHERN LILY DR, YULEE

BLD DATE	04/04/2023 NW	LGL DATE	
XF DATE		LAND DATE	
INC DATE		AG DATE	

NASSAU COUNTY PROPERTY

PAGE 1 of 2 4

VALUATION SUMMARY

VALUATION BY		STANDARD
Tax Group: 4	Tax Dist:	
BUILDING MARKET VALUE		710,662
TOTAL MARKET OB/XF VALUE		121,577
TOTAL LAND VALUE - MARKET		115,000
TOTAL MARKET VALUE		947,239
SOH/AGL Deduction		270,129
ASSESSED VALUE		677,110
TOTAL EXEMPTION VALUE	HX HB	50,000
BASE TAXABLE VALUE		627,110
TOTAL JUST VALUE		947,239
NCON VALUE		0
INCOME VALUE		
PREVIOUS YEAR MKT VALUE		799,086

PERMIT NUM	DESCRIPTION	AMT	ISSUED
B2005951	SCRN ENCLSR	12,713	08/01/2020
B1700049	SWIM POOL	0	01/10/2017
B1531113	CO ISSUED	0	04/21/2016
B1531113	NEW CONSTR	486,167	09/01/2015

SALES DATA

OFF RECORD Number	DATE	TYPE INST	Q U	V I	RSN CD	SALE PRICE
2254/0741	2/04/2019	WD	Q	I	02	740,000
GRANTOR: MURPHY JASON & RAEANN						
GRANTEE: GRIFFITH CHARLES JR						
1963/0062	2/12/2015	WD	Q	V	01	50,000
GRANTOR: BLACKROCK LAND TRUST						
GRANTEE: MURPHY JASON & RAEA						

BUILDING NOTES

BUILDING DIMENSIONS

FSP=[YR=2020] W50 S3 BAS=[YR=2016] W16 S17 W6 S17 E6 S14 E3 D2 R2 E4 U2 R2 E2 N5 E12 FOP=[YR=2016] S6 E18 FGR=[YR=2016] S26 E10 S2 E12 N31 W22 S3$ N4 W11 N5 W7 S3$ N3 E7 S5 E11 S1 E23 N36 W11 N8 W14 S8 W24 N10 W1$ E1 S10 E24 N8 E14 S8 E11 N13$ PTR= E20 FUS=[YR=2016] E32 S13 E4 S13 W4 S12 W12 N14 W16 STR=[YR=2018] S10 W4 N10 E4$ W4 N24$ W20$.

EXTRA FEATURES

LN	OB/XF CODE	DESCRIPTION	BLD	CAP	L	W	UNITS	UT	Adj R	ADJ UNIT PRICE	ORIG COND	YEAR ON	YEAR ACTUAL	Q	% COND	OB/XF MKT VALUE	NOTES
1	0855	CONC PAVER	0	100	0	0	266.00	SF	10.00	10.00	100	2016	2016	3	97	2,580	
2	0855	CONC PAVER	0	100	0	0	330.00	SF	10.00	10.00	100	2016	2016	3	97	3,201	
3	0812	CONCRETE C	0	100	0	0	3,492.00	SF	4.00	4.00	100	2016	2016	3	97	13,549	
4	0500	FP-PRE FAB	0	100	0	0	1.00	UT	3,500.00	3,500.00	100	2016	2016	3	98	3,430	
5	0861	POOL GUNIT	0	100	36	20	720.00	SF	85.00	85.00	100	2017	2017	3	87	53,244	
6	0877	JACUZZI	0	100	0	0	1.00	UT	1,000.00	1,000.00	100	2017	2017	3	82	820	
7	0855	CONC PAVER	0	100	0	0	1,114.00	SF	10.00	10.00	100	2017	2017	3	97	10,806	
8	0855	CONC PAVER	0	100	0	0	532.00	SF	12.50	12.50	100	2017	2017	3	97	6,451	
9	0871	POOL HTR R	0	100	0	0	1.00	UT	2,000.00	2,000.00	100	2017	2017	3	82	1,640	
10	0855	CONC PAVER	0	100	38	2	76.00	SF	10.00	10.00	100	2017	2017	3	97	737	

LAND DESCRIPTION

TOTAL OB/XF 96,458

LN	USE CODE	CLS	LAND USE DESCRIPTION	CAP	RD	LOC ZONE	FRONT	DEPTH	TOT LND UTS	UNIT TYPE	DT	DPTH FACT	% COND	TOT ADJ	UNIT PRICE	ADJ UNIT PRICE	LAND VALUE	OTHER ADJUSTMENTS AND NOTES	YEAR	DENSITY	DECL	FRZ	YR	CONSRV
1	000100	C	SFR	100		RS-1	0.00	0.00	1.00	LT		1.00	1.00	1.00	115,000.00	115,000.00	115,000							

REVIEW DATE 10/27/2020 BY KW Total Acres: 0.00 Total Land Value: 115,000 Market: 0 Agricultural: 0 Common: 115,000 PRINTED 08/02/2023 BY SYS

LOT 16
BLACKROCK HAMMOCK PB 6/286

GRIFFITH CHARLES JR & BEATRICE
96321 SOUTHERN LILY DR
YULEE, FL 32097

2023

50-3N-28-016B-0016-0000

BUILDING CHARACTERISTICS

ELEMENT	CD	CONSTRUCTION

DOR CODE	0100	SINGLE FAMILY	
MAP NUM		MKT AREA	04
NEIGHBORHOOD/LOC	4028.00		

AREA TYPE	TOTAL GROSS AREA	PCT OF BASE	TOT ADJ AREA	SUBAREA MARKET VALUE
TOTALS				

MARKET ADJUSTMENTS

TYPE	MDL	EFF. AREA	TOT ADJ PTS	EFF. BASE RATE	REPL. COST NEW	AYB	EYB	ECON	FNCT		NORM	% COND

BLD DATE	04/04/2023	NW	LGL DATE
XF DATE			LAND DATE
INC DATE			AG DATE

NASSAU COUNTY PROPERTY

PAGE 2 of 2 4

VALUATION SUMMARY

VALUATION BY		STANDARD
Tax Group: 4	Tax Dist:	
BUILDING MARKET VALUE		710,662
TOTAL MARKET OB/XF VALUE		121,577
TOTAL LAND VALUE - MARKET		115,000
TOTAL MARKET VALUE		947,239
SOH/AGL Deduction		270,129
ASSESSED VALUE		677,110
TOTAL EXEMPTION VALUE	HX HB	50,000
BASE TAXABLE VALUE		627,110
TOTAL JUST VALUE		947,239
NCON VALUE		0
INCOME VALUE		
PREVIOUS YEAR MKT VALUE		799,086

PERMIT NUM	DESCRIPTION	AMT	ISSUED

SALES DATA

OFF RECORD Number	DATE	TYPE INST	Q / U	V / I	RSN CD	SALE PRICE
2254/0741	2/04/2019	WD	Q	I	02	740,000
GRANTOR: MURPHY JASON & RAEANN						
GRANTEE: GRIFFITH CHARLES JR						
1963/0062	2/12/2015	WD	Q	V	01	50,000
GRANTOR: BLACKROCK LAND TRUST						
GRANTEE: MURPHY JASON & RAEA						

BUILDING NOTES

BUILDING DIMENSIONS

EXTRA FEATURES

LN	OB/XF CODE	DESCRIPTION	BLD	CAP	L	W	UNITS	UT	Adj R	ADJ UNIT PRICE	ORIG COND	YEAR ON	YEAR ACTUAL	Q	% COND	OB/XF MKT VALUE	NOTES
11	0855	CONC PAVER	0	100	38	4	152.00	SF	10.00	10.00	100	2017	2017	3	97	1,474	
12	0463	FENCE GATE	0	100	0	0	2.00	UT	300.00	300.00	100	2017	2017	3	94	564	
13	0462	ST/AL FNC	0	100	450	0	1,800.00	SF	10.00	10.00	100	2017	2017	3	87	15,660	
14	0911	SCRN RM A	0	100	38	12	456.00	SF	17.50	17.50	100	2020	2020	3	93	7,421	

LAND DESCRIPTION

TOTAL OB/XF 25,119

LN	USE CODE	CLS	LAND USE DESCRIPTION	CAP	RD	LOC ZONE	FRONT	DEPTH	TOT LND UTS	UNIT TYPE	DT	DPTH FACT	% COND	TOT ADJ	UNIT PRICE	ADJ UNIT PRICE	LAND VALUE	OTHER ADJUSTMENTS AND NOTES	YEAR	DENSITY	DECL	FRZ	YR	CONSRV

REVIEW DATE 10/27/2020 BY KW Total Acres: 0.00 Total Land Value: 115,000 Market: 0 Agricultural: 0 Common: 115,000 PRINTED 08/02/2023 BY SYS