IN OR 2587/334
EX 27-2

MAC NEIL FAMILY TRSUT/MAC NEIL JOHN A TRUSTEE
PO BOX 1266
POCASSET, MA 02559

2023

50-3N-28-0000-0027-0010

NASSAU COUNTY PROPERTY

BUILDING CHARACTERISTICS

ELEMENT	CD	CONSTRUCTION
Exterior Wall	12	CEDAR 100
Roof Structur	03	GABLE/HIP 100
Roof Cover	12	MODULAR MT 100
Interior Wall	05	DRYWALL 50
Interior Wall	06	CUST PANEL 50
Interior Floo	09	PINE WOOD 90
Interior Floo	11	CLAY TILE 10
Air Condition	03	CENTRAL 100
Heating Type	04	AIR DUCTED 100
Bedrooms		3 100
Bathrooms		2 100
Frame	02	WOOD FRAME 100
Stories	1.	1. 100
Units		0 100
BUD8 Adjustme	04	DIST 01 100
Occupancy	00	NONE 100
Quality	03	Quality Level 03
DOR CODE	0100	SINGLE FAMILY
MAP NUM		MKT AREA 04
NEIGHBORHOOD/LOC	4031.00	

AREA TYPE	TOTAL GROSS AREA	PCT OF BASE	TOT ADJ AREA	SUBAREA MARKET VALUE
BAS	1,506	100	1,506	116,902
BAS	128	100	128	9,936
BAS	1,277	100	1,277	99,127
DCK	244	10	24	1,863
DCK	143	10	14	1,087
FOP	180	30	54	4,192
FOP	180	30	54	4,192
UCP	440	20	88	6,831
TOTALS	4,098		3,145	244,128

MARKET ADJUSTMENTS

TYPE	MDL	EFF. AREA	TOT ADJ PTS	EFF. BASE RATE	REPL. COST NEW	AYB	EYB	ECON	FNCT		NORM	% COND
0100	01	3,145	102.3960	92.41	290,629	1960	1990	0	0	0	16.00	84.00

1 SINGLE FAM – 0% - 2023 Heated Area: 2911 HX Base Yr

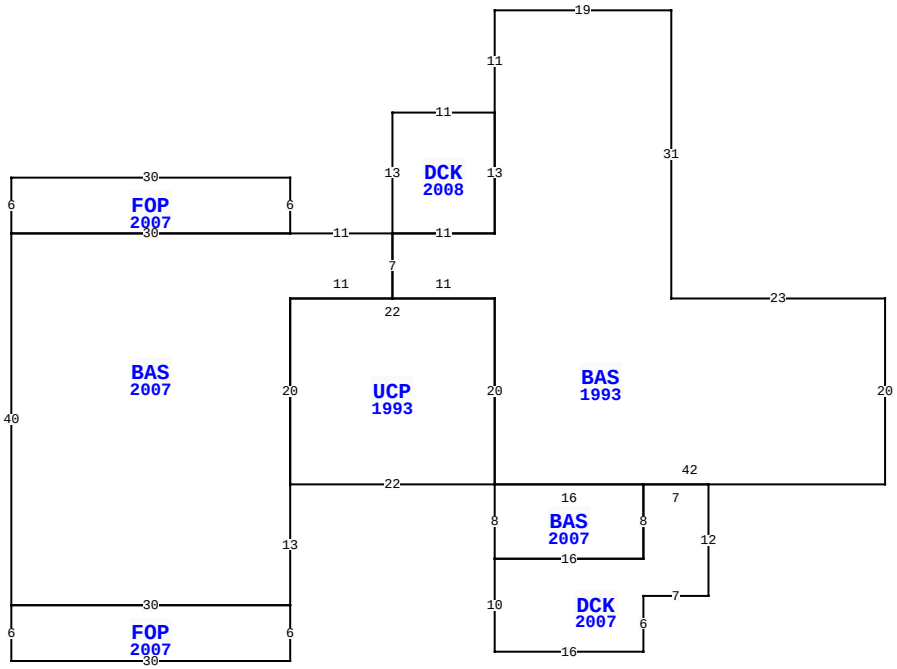

96089 CREWS CREEK AVE, YULEE

BLD DATE		LGL DATE	
XF DATE		LAND DATE	06/20/2023 MLU
INC DATE		AG DATE	

VALUATION SUMMARY

VALUATION BY	STANDARD
Tax Group: 4	Tax Dist:
BUILDING MARKET VALUE	244,128
TOTAL MARKET OB/XF VALUE	11,326
TOTAL LAND VALUE - MARKET	216,000
TOTAL MARKET VALUE	471,454
SOH/AGL Deduction	0
ASSESSED VALUE	471,454
TOTAL EXEMPTION VALUE	0
BASE TAXABLE VALUE	471,454
TOTAL JUST VALUE	471,454
NCON VALUE	0
INCOME VALUE	
PREVIOUS YEAR MKT VALUE	401,106

PERMIT NUM	DESCRIPTION	AMT	ISSUED
B19542	REMODEL	5,000	03/01/2007
M12213	MECH OTHER	100	11/01/2006
R09860	REPAIR/RRF	7,000	11/01/2006
B18758	REMODEL	120,000	10/31/2006

SALES DATA

OFF RECORD Number	DATE	TYPE INST	Q U	V I	RSN CD	SALE PRICE
2587/0334	8/16/2022	WD	Q	I	02	490,000
GRANTOR: SCHWARTZ WILLIAM						
GRANTEE: MAC NEIL FAMILY TRU						
1616/0977	4/13/2009	QC	U	I	11	100
GRANTOR: SCHWARTZ WILLIAM & KI						
GRANTEE: SCHWARTZ WILLIAM						

BUILDING NOTES

BUILDING DIMENSIONS

BAS=[YR=1993] W23 N31 W19 S11 DCK=[YR=2008] W11 S13 E11 N13$ S13 W11 BAS=[YR=2007] W11 FOP=[YR=2007] N6 W30 S6 E30$ W30 S40 FOP=[YR=2007] S6 E30 N6 W30$ E30 N13 UCP=[YR=1993] E22 N20 W22 S20$ N20 E11 N7$ S7 E11 S20 BAS=[YR=2007] S8 DCK=[YR=2007] S10 E16 N6 E7 N12 W7 S8 W16$ E16 N8 W16$ E42 N20$.

EXTRA FEATURES

L N	OB/XF CODE	DESCRIPTION	BLD	CAP	L	W	UNITS	UT	Adj R	ADJ UNIT PRICE	ORIG COND	YEAR ON	YEAR ACTUAL	Q	% COND	OB/XF MKT VALUE	NOTES
4	0530	STBL WD	0	0	66	22	1,452.00	SF	15.00	15.00	100	2007	2007	3	52	11,326	

LAND DESCRIPTION

TOTAL OB/XF 11,326

L N	USE CODE	CLS	LAND USE DESCRIPTION	CAP	R D	LOC ZONE	FRONT	DEPTH	TOT LND UTS	UNIT TYPE	D T	DPTH FACT	% COND	TOT ADJ	UNIT PRICE	ADJ UNIT PRICE	LAND VALUE	OTHER ADJUSTMENTS AND NOTES	YEAR	DENSITY	DECL	FRZ	YR	CONSRV
1	000115	C	SFR ACRES	0		RMH	0.00	0.00	2.70	AC		1.00	1.00	1.00	80,000.00	80,000.00	216,000							

REVIEW DATE 07/25/2022 BY KW Total Acres: 2.70 Total Land Value: 216,000 Market: 0 Agricultural: 0 Common: 216,000 PRINTED 08/02/2023 BY SYS