IN OR 1840/388

CORAM JOSH A & SHAWNA E
96629 BLACKROCK RD
YULEE, FL 32097

2023

50-3N-28-0000-0022-0040

NASSAU COUNTY PROPERTY

BUILDING CHARACTERISTICS

ELEMENT	CD	CONSTRUCTION
Exterior Wall	16	WD FR STUC 100
Roof Structur	08	IRREGULAR 100
Roof Cover	03	COMP SHNGL 100
Interior Wall	05	DRYWALL 100
Interior Floo	14	CARPET 70
Interior Floo	11	CLAY TILE 30
Air Condition	03	CENTRAL 100
Heating Type	04	AIR DUCTED 100
Bedrooms		6 100
Bathrooms		4 100
Frame	02	WOOD FRAME 100
Stories	2.	2. 100
Units		0 100
Occupancy	00	NONE 100
Quality	03	Quality Level 03
DOR CODE	0100	SINGLE FAMILY
MAP NUM		MKT AREA 04
NEIGHBORHOOD/LOC	4031.00	

AREA TYPE	TOTAL GROSS AREA	PCT OF BASE	TOT ADJ AREA	SUBAREA MARKET VALUE
BAS	3,376	100	3,376	467,927
FGR	1,028	55	565	78,311
FOP	216	30	65	9,009
FOP	435	30	130	18,018
FUS	1,283	100	1,283	177,829
TOTALS	6,338		5,419	751,096

MARKET ADJUSTMENTS

TYPE	MDL	EFF. AREA	TOT ADJ PTS	EFF. BASE RATE	REPL. COST NEW	AYB	EYB	ECON	FNCT		NORM	% COND
0500	01	5,419	106.3050	151.48	820,870	2005	2005	0	0	0	8.50	91.50

1 SFR CUST - 100% - 2014 Heated Area: 4659 HX Base Yr 2014

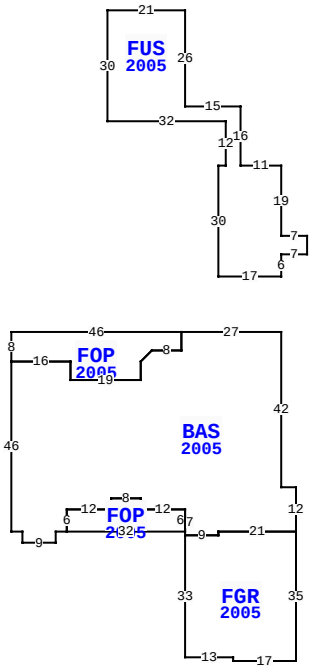

96629 BLACKROCK RD, YULEE

BLD DATE		LGL DATE	
XF DATE		LAND DATE	06/20/2023 MLU
INC DATE		AG DATE	

VALUATION SUMMARY

VALUATION BY		STANDARD
Tax Group: 4	Tax Dist:	
BUILDING MARKET VALUE		751,096
TOTAL MARKET OB/XF VALUE		15,382
TOTAL LAND VALUE - MARKET		129,625
TOTAL MARKET VALUE		896,103
SOH/AGL Deduction		510,078
ASSESSED VALUE		386,025
TOTAL EXEMPTION VALUE	HX HB	50,000
BASE TAXABLE VALUE		336,025
TOTAL JUST VALUE		896,103
NCON VALUE		0
INCOME VALUE		
PREVIOUS YEAR MKT VALUE		691,748

PERMIT NUM	DESCRIPTION	AMT	ISSUED
B13490	NEW CONSTR	0	12/01/2004
E0413994	ELEC OTHER	2,000	12/01/2004

SALES DATA

OFF RECORD Number	DATE	TYPE INST	Q U	V I	RSN CD	SALE PRICE
1840/0388	2/05/2013	WD	Q	I	02	314,000
GRANTOR: BANK OF AMERICA NA						
GRANTEE: CORAM JOSH A & SHAW						
1821/0994	10/25/2012	CT	U	I	18	100
GRANTOR: CLERK OF COURT						
GRANTEE: BANK OF AMERICA NA						

BUILDING NOTES

EXTRA FEATURES

LN	OB/XF CODE	DESCRIPTION	BLD	CAP	L	W	UNITS	UT	Adj R	ADJ UNIT PRICE	ORIG COND	YEAR ON	YEAR ACTUAL	Q	% COND	OB/XF MKT VALUE	NOTES
1	0500	FP-PRE FAB	0	100	0	0	1.00	UT	3,500.00	3,500.00	100	2005	2005	3	90	3,150	
2	0812	CONCRETE C	0	100	0	0	3,515.00	SF	4.00	4.00	100	2005	2005	3	87	12,232	

BUILDING DIMENSIONS

BAS=[YR=2005] W27 FOP=[YR=2005] W46 S8 E16 S5 E19 N5 U3 R3 E8 N5$ S5 W8 D3 L3 S5 W19 N5 W16 S46 E3 S3 E9 N3 E3
FOP=[YR=2005] E32 N6 W12 N3 W8 S3 W12 S6$ N6 E12 N3 E8 S3 E12 S7 FGR=[YR=2005] S33 E13 S1 E17 N35 W21 S1 W9$ E9 N1 E21 N12 W4 N42$ PTR= N15 FUS=[YR=2005] N6 E7 N5 W7 N19 W11 N16 W15 N26 W21 S30 E32 S12 W2 S30 E17 $ S15$.

LAND DESCRIPTION

TOTAL OB/XF 15,382

LN	USE CODE	CLS	LAND USE DESCRIPTION	CAP	RD	LOC ZONE	FRONT	DEPTH	TOT LND UTS	UNIT TYPE	DT	DPTH FACT	% COND	TOT ADJ	UNIT PRICE	ADJ UNIT PRICE	LAND VALUE	OTHER ADJUSTMENTS AND NOTES	YEAR	DENSITY	DECL	FRZ	YR	CONSRV
1	000115	C	SFR ACRES	100		RS-1	0.00	0.00	1.60	AC		1.00	1.00	1.00	80,000.00	80,000.00	128,000							
2	009525	C	RES POND	100					0.65	AC		1.00	1.00	1.00	2,500.00	2,500.00	1,625							

REVIEW DATE 05/23/2022 BY KWA Total Acres: 2.25 Total Land Value: 129,625 Market: 0 Agricultural: 0 Common: 129,625 PRINTED 08/02/2023 BY SYS