BLOCK 5 LOT 4
1983 SEVI SW/MH
TOWN OF KINGS FERRY PB 0/64

FRANKLIN BILLY JO
PO BOX 85
HILLIARD, FL 32046-0085

2023

49-4N-25-4260-0005-0040

NASSAU COUNTY PROPERTY

BUILDING CHARACTERISTICS

ELEMENT	CD	CONSTRUCTION
Exterior Wall	30	VINYL 100
Roof Structur	03	GABLE/HIP 100
Roof Cover	03	COMP SHNGL 100
Interior Wall	05	DRYWALL 100
Interior Floo	08	SHT VINYL 50
Interior Floo	14	CARPET 50
Air Condition	03	CENTRAL 100
Heating Type	04	AIR DUCTED 100
Bedrooms		2 100
Bathrooms		2 100
Frame	02	WOOD FRAME 100
Stories	1.	1. 100
Units		0 100
Quality	03	Quality Level 03
DOR CODE	0200	MOBILE HOME
MAP NUM		MKT AREA 05
NEIGHBORHOOD/LOC	5003.00	

AREA TYPE	TOTAL GROSS AREA	PCT OF BASE	TOT ADJ AREA	SUBAREA MARKET VALUE
BAS	924	100	924	20,721
DCK	360	15	54	1,211
UOP	200	25	50	1,121
TOTALS	1,484		1,028	23,053

MARKET ADJUSTMENTS

TYPE	MDL	EFF. AREA	TOT ADJ PTS	EFF. BASE RATE	REPL. COST NEW	AYB	EYB	ECON	FNCT		NORM	% COND
0820	02	1,028	115.0000	74.75	76,843	1983	1983	0	0	0	70.00	30.00

1 M/H 93- – 0% - 0 Heated Area: 924 HX Base Yr

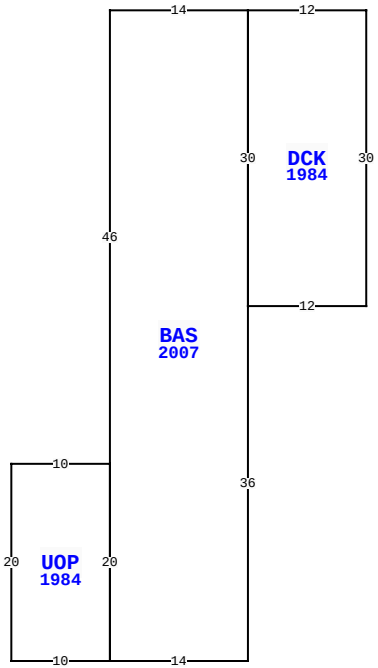

BLD DATE	05/27/2008 JW
XF DATE	05/27/2008 JW
INC DATE	
LGL DATE	
LAND DATE	
AG DATE	

378018 KINGS FERRY RD, HILLIARD

VALUATION SUMMARY

VALUATION BY	STANDARD
Tax Group: 4	Tax Dist:
BUILDING MARKET VALUE	23,053
TOTAL MARKET OB/XF VALUE	2,290
TOTAL LAND VALUE - MARKET	23,888
TOTAL MARKET VALUE	49,231
SOH/AGL Deduction	10,424
ASSESSED VALUE	38,807
TOTAL EXEMPTION VALUE	0
BASE TAXABLE VALUE	38,807
TOTAL JUST VALUE	49,231
NCON VALUE	0
INCOME VALUE	
PREVIOUS YEAR MKT VALUE	37,498

PERMIT NUM	DESCRIPTION	AMT	ISSUED

SALES DATA

OFF RECORD Number	DATE	TYPE INST	Q U /	V I /	RSN CD	SALE PRICE

BUILDING NOTES

BUILDING DIMENSIONS

BAS=[YR=2007] W14 S46 UOP=[YR=1984] W10 S20 E10 N20$ S20 E14 N36 DCK=[YR=1984] E12 N30 W12 S30$ N30$.

EXTRA FEATURES

LN	OB/XF CODE	DESCRIPTION	BLD	CAP	L	W	UNITS	UT	Adj R	ADJ UNIT PRICE	ORIG COND	YEAR ON	YEAR ACTUAL	Q	% COND	OB/XF MKT VALUE	NOTES
1	0504	FP-ELECTRI	0	0	0	0	1.00	UT	2,000.00	2,000.00	100	1983	1983	3	56	1,120	
2	0940	SHEDS/PORT	0	0	0	0	60.00	SF	30.00	30.00	100	2013	2013	3	65	1,170	

LAND DESCRIPTION

TOTAL OB/XF 2,290

LN	USE CODE	CLS	LAND USE DESCRIPTION	CAP	RD	LOC ZONE	FRONT	DEPTH	TOT LND UTS	UNIT TYPE	DT	DPTH FACT	% COND	TOT ADJ	UNIT PRICE	ADJ UNIT PRICE	LAND VALUE	OTHER ADJUSTMENTS AND NOTES	YEAR	DENSITY	DECL	FRZ	YR	CONSRV
1	000102	C	SFR/MH	0	0006	OR	0.00	0.00	0.39	AC		1.00	1.00	1.75	35,000.00	61,250.00	23,888							

REVIEW DATE 05/24/2023 BY KWA Total Acres: 0.39 Total Land Value: 23,888 Market: 0 Agricultural: 0 Common: 23,888 PRINTED 08/02/2023 BY SYS